FLUOR®

EARTHQUAKE ENGINEERING

TABLE OF CONTENTS

TABLE OF CONTENTS 1

PURPOSE 3

SCOPE 3

APPLICATION 3
- Seismic Design Criteria 4
- Building Structures 4
- Nonstructural Components 4
- Nonbuilding Structures 4

SEISMIC DESIGN CRITERIA 4
- Load Combinations 5
- Site Classification 5
- Seismic Ground Motion Values 5
- Occupancy Category And Importance Factor 6
- Seismic Design Category 6

BUILDING STRUCTURES 7
- Structural System Selection 7
- Structural Irregularity 8
  - Horizontal Structural Irregularity 8
  - Vertical Structural Irregularity 9
- Redundancy 9
- Direction Of Loading 10
- Seismic Load Effects 10
- Analysis Procedure Selection 11
- Fundamental Period, T 11
- Equivalent Lateral Force (ELF) Procedure 12
  - Vertical Distribution Of Seismic Forces 13
  - Overturning Moments 14
- Modal Response Spectrum Analysis (MRSA) Procedure 15
  - Vertical Distribution Of Seismic Forces 16
  - Overturning Moments 16
- Drift Limitations 16
- P-Delta Effects 16
- Torsional Effects 17

NONSTRUCTURAL COMPONENTS 17
- General 17
- Exemptions 18
- Seismic Design Forces 18
- Anchorage 19

Copyright © 2011, Fluor Corporation. All Rights Reserved.

FLUOR®

EARTHQUAKE ENGINEERING

NONBUILDING STRUCTURES 20
General 20
Fundamental Period T 20
Rigid Nonbuilding Structures 20
Nonbuilding Structures Similar To Buildings 21
Drift Limitations 21
Equivalent Lateral Force (ELF) Procedure 21
Pipe Racks 22
Open-Equipment Structures 23
Nonbuilding Structures Not Similar To Buildings 23
Equivalent Lateral Force (ELF) Procedure 23
Horizontal Vessels And Heat Exchangers 24
Skirt Supported Vertical Vessels 26
Grade Supported Flat-Bottom Tanks 28

REFERENCES 28

ATTACHMENTS 29

Copyright © 2011, Fluor Corporation. All Rights Reserved.

FLUOR®

EARTHQUAKE ENGINEERING

PURPOSE

This document provides procedures for calculation of design earthquake forces on building structures, nonstructural components, and nonbuilding structures.

SCOPE

This document is based on ASCE 7-05 and either the 2006 or 2009 International Building Code (IBC).

This document is intended to be used as a supplement to the ASCE 7 and the IBC and is not as an independent document. The main emphasis of this document is for petrochemical and industrial facilities. However, it is also applicable to a broad spectrum of other types of facilities. Additional background information can be found in the listed references.

Note!!! The IBC references ASCE 7 for most, but not all, of the design earthquake force requirements. There are several topics related to design earthquake force requirements that are prescribed in both the IBC and ASCE 7. These requirements are sometimes in conflict with each other. This document will clarify the few differences, and when to use them.

This document does not cover member design and detailing requirements. These requirements are dependent on the construction type and Seismic Design Category (SDC). The design and detailing requirements are found in the IBC and ASCE 7, and must be followed to ensure the required structural behavior, such as ductility and failure mode, on which the calculated design earthquake force level is based. FEMA 450-2 is a good source of guidance on member design and detailing requirements.

Note!!! If the project structures are to be designed in accordance with the IBC, the material detailing requirements are prescribed in IBC Chapters 19 through 22. Otherwise, the material detailing requirements are prescribed in ASCE 7 Chapter 14.

APPLICATION

This document should be used for calculation of design earthquake forces for all buildings, nonstructural components, and nonbuilding structures typically found in petrochemical facilities. It also can be used for most industrial and commercial applications where the IBC or ASCE 7 is called for, except where superseded by more stringent Client or local jurisdictional requirements.

Copyright © 2011, Fluor Corporation. All Rights Reserved.

FLUOR®

EARTHQUAKE ENGINEERING

Seismic Design Criteria

Seismic design criteria for the design and construction of buildings and other structures subject to earthquake ground motions are prescribed in IBC Section 1613 and ASCE 7 Chapter 11.

Building Structures

Building Structures are usually enclosed by walls and a roof and constructed to provide support or shelter for an occupancy. Seismic design requirements for Building Structures are prescribed in ASCE 7 Chapter 12.

Nonstructural Components

Most petrochemical or industrial equipment are either Nonstructural Components or Nonbuilding Structures. If the equipment is in a structure and the weight is less than 25% of the combined weight of the equipment and supporting structure then it is considered a Nonstructural Component. Stand alone equipment, and equipment in structures weighing greater than 25% of the combined weight of the equipment and supporting structure are considered Nonbuilding Structures. Seismic design requirements for Nonstructural Components are prescribed in ASCE 7 Chapter 13.

Nonbuilding Structures

Equipment structures are typically nonbuilding structures similar to buildings; because they are typically not occupied and have lateral force resisting systems similar to buildings. Stand alone equipment are generally nonbuilding structures not similar to buildings. Seismic design requirements for Nonbuilding Structures are prescribed in ASCE 7 Chapter 15.

SEISMIC DESIGN CRITERIA

Design of facilities should comply with the Project Design Criteria developed by the Lead Structural Engineer, which is based on the client's specifications, design criteria, and applicable standards. Local building officials should be consulted to determine applicable codes and standards for the project.

Copyright © 2011, Fluor Corporation. All Rights Reserved.

FLUOR®

EARTHQUAKE ENGINEERING

Load Combinations

See the project criteria for applicable strength basis and allowable stress basis load combinations appropriate for use with earthquake loads (E).

Note!!! The load combinations are developed to meet the requirements of the client's design criteria and the applicable codes. Additional guidance and clarifications can be found in ASCE Seismic Petrochemical Guideline Section 5.2.2.2.

Site Classification

The seismic site classification is determined in accordance with either IBC Section 1613 or ASCE 7 Chapter 20. This information should be provided in the project geotechnical report. Site Class D should be used when the soil properties are not known, unless geotechnical data or the local jurisdiction determines that Site Class E or F is likely to be present at the site.

Seismic Ground Motion Values

The seismic ground motion design response spectrum is determined in accordance with ASCE 7 Section 11.4. The mapped acceleration parameters, (S_s and S_1), for the Maximum Considered Earthquake (MCE), the Site Class (A through F), and the long-period transition period (T_L) should be provided in the project geotechnical report. The MCE spectral acceleration values are adjusted by the site effects coefficients (F_a and F_v) as defined in ASCE 7 Tables 11.4-1 and 11.4-2 respectively. Straight-line interpolation is permitted for intermediate values of S_s and S_1.

$$S_{MS} = F_a S_s \qquad \text{\{ASCE 7 Eq. 11.4-1\}}$$

$$S_{M1} = F_v S_1 \qquad \text{\{ASCE 7 Eq. 11.4-2\}}$$

Note!!! For projects located in the United States, the seismic ground motion parameters can be obtained from the United States Geologic Survey (USGS) web site. If site-specific ground motion parameters are desired or required, use ASCE 7 Chapter 21 procedures.

The design spectral acceleration values are determined by multiplying the adjusted MCE spectral acceleration values by 2/3.

$$S_{DS} = \frac{2}{3} S_{MS} \qquad \text{\{ASCE 7 Eq. 11.4-3\}}$$

$$S_{D1} = \frac{2}{3} S_{M1} \qquad \text{\{ASCE 7 Eq. 11.4-4\}}$$

Copyright © 2011, Fluor Corporation. All Rights Reserved.

FLUOR®

EARTHQUAKE ENGINEERING

The Design Response Spectrum for the project is constructed in accordance with ASCE 7 Figure 11.4-1, which is a plot of ASCE 7 Equations 11.4-5, 11.4-6, and 11.4-7.

Occupancy Category And Importance Factor

If the project structures are to be designed in accordance with the IBC, the Occupancy Category is determined in accordance with IBC Section 1604.5. Otherwise, the Occupancy Category is determined in accordance with ASCE 7 Table 1-1. Using the Occupancy Category, the Importance Factor is determined in accordance with ASCE 7 Table 11.5-1.

Seismic Design Category

The seismic design category (SDC) is determined in accordance with either IBC Section 1613 or ASCE 7 Section 11.6. The SDC is used to define:

- Permissible structural systems
- Limitations on structural height and irregularity
- Permitted lateral force procedure
- Level of strength and special seismic detailing

The SDC is determined both as a function of S_{DS} and S_{D1}. Whichever results in the most severe category governs. When $S_1 < 0.75$, the Seismic Design Category may be determined from S_{DS} alone, within restrictions prescribed in ASCE 7 Section 11.6.

Seismic Design Category Summary					
S_{DS}	S_{D1}	Occupancy Category			
		I	II	III	IV
$S_{DS} < 0.167g$	$S_{D1} < 0.067g$	A	A	A	A
$0.167g \le S_{DS} < 0.33g$	$0.067g \le S_{D1} < 0.133g$	B	B	B	C
$0.33g \le S_{DS} < 0.50g$	$0.133g \le S_{D1} < 0.20g$	C	C	C	D
$0.50g \le S_{DS}$	$0.20g \le S_{D1}$	D	D	D	D
$S_1 \ge 0.75g$	$S_1 \ge 0.75g$	E	E	E	F

Note!!! Structures in Seismic Design Category A only need to meet the seismic requirements of ASCE 7 Section 11.7.

Copyright © 2011, Fluor Corporation. All Rights Reserved.

FLUOR®

EARTHQUAKE ENGINEERING

BUILDING STRUCTURES

Structural System Selection

Select the Seismic Force-Resisting System from ASCE 7 Table 12.2-1. The selection of a specific Seismic Force-Resisting System results in corresponding Detailing Requirements, Response Modification Coefficient, System Overstrength Factor, Deflection Amplification Factor, System Limitations, and Height Limitations.

Note!!! If the project structures are to be designed in accordance with the IBC, the Detailing Requirements are determined in accordance with IBC Chapters 19 through 23. Otherwise, the Detailing Requirements are determined in accordance with ASCE 7 Chapter 14.

- The response modification factor (R) is an empirical response reduction factor intended to account for damping, overstrength, and the ductility inherent in the structural system at displacements great enough to surpass initial yield and approach the ultimate load displacement of the structural system.
- The system overstrength factor (Ω_o) is used to convert the member forces from the elastic analysis to expected inelastic forces.
- The deflection amplification factor (C_d) is used to convert the deflections from the elastic analysis to expected inelastic deflections.

ASCE 7 Table 12.2-1 has many pertinent footnotes.

- Footnote “a” clarifies that the R values reduce the elastic response spectra to the strength design level.
- Footnote “b” clarifies the use of the deflection amplification factor.
- Footnotes “c”, “d”, “e”, and “f” provide clarifications to the height limits, which preclude combinations of structural systems and structural heights that have not performed well in past earthquakes.
- Footnote “g” indicates that Ω_o values for flexible diaphragm structures may be reduced to $\left(\Omega_o - \frac{1}{2}\right)$ with a minimum value of 2.

ASCE 7 Sections 12.2.2 and 12.2.3 indicate that it is acceptable to have different framing systems in different orthogonal directions or in the same orthogonal direction.

ASCE 7 Sections 12.2.2 and 12.2.4 indicate that for those cases where combinations of structural systems are employed in the same direction, the value of R used for design in

Copyright © 2011, Fluor Corporation. All Rights Reserved.

FLUOR®

that direction shall not be greater than the least value of R for any of the systems utilized in that direction. The deflection amplification factor (C_d) and the system overstrength factor (Ω_o) in the direction under consideration at any story shall not be less than the largest value of this factor for the R factor used in the direction being considered.

Structural Irregularity

The requirements of ASCE 7 Section 12.3.2 are designed to encourage structures to be designed to have regular configurations and to prohibit gross irregularity in structures located on sites close to major active faults where very strong ground motion and extreme inelastic demands can be experienced. In a regular structure, inelastic demands produced by strong ground shaking tend to be well distributed throughout the structure, resulting in a dispersion of energy dissipation and damage.

Past earthquakes have repeatedly shown that structures having irregular configurations suffer greater damage than structures having regular configurations. This situation prevails even with good design and construction. There are several reasons for this poor behavior of irregular structures.

- In an irregular structure, inelastic behavior can concentrate in the zone of irregularity, resulting in rapid failure of structural elements in these areas.
- Some irregularities introduce unanticipated stresses into the structure which designers frequently overlook when detailing the structural system.
- The elastic analysis methods typically employed in the design of structures often cannot predict the distribution of earthquake demands in an irregular structure very well, leading to inadequate design in the zones of irregularity.

Horizontal Structural Irregularity

ASCE 7 Section 12.3.2.1 and ASCE 7 Table 12.3-1 indicate under what circumstances a structure must be designated as having a horizontal irregularity. Horizontal structural irregularities include:

- Torsional Irregularity (Types 1a and 1b)
- Reentrant Corner Irregularity (Type 2)
- Diaphragm Discontinuity Irregularity (Type 3)
- Out-Of-Plane Offsets Irregularity (Type 4)
- Nonparallel Systems Irregularity (Type 5)

Copyright © 2011, Fluor Corporation. All Rights Reserved.

FLUOR®

EARTHQUAKE ENGINEERING

Vertical Structural Irregularity

ASCE 7 Section 12.3.2.2 and ASCE 7 Table 12.3-2 indicate under what circumstances a structure must be designated as having a vertical irregularity. Vertical structural irregularities include:

- Stiffness-Soft Story Irregularity (Types 1a and 1b)
- Weight (Mass) Irregularity (Type 2)
- Vertical Geometric Irregularity (Type 3)
- In-Plane Discontinuity Irregularity (Type 4)
- Discontinuity In Lateral Strength – Weak Story Irregularity (Types 5a and 5b)

Redundancy

The seismic redundancy factor (ρ) is determined in accordance with ASCE 7 Section 12.3.4. A separate redundancy factor must be determined in each orthogonal direction.

The seismic redundancy factor (ρ) may be taken as 1.0 for the following:

- Structures assigned to Seismic Design Categories B or C
- Design of Nonstructural Components
- Design of Nonbuilding Structures Not Similar To Buildings
- Upper stories where the interstory shear is less than 35% of the base shear.
- Other conditions as defined in ASCE 7 Section 12.3.4.1

For structures and nonbuilding structures similar to buildings assigned to Seismic Design Categories D, E, or F, the assumption is that either an appropriate level of redundancy is provided in the system $(\rho = 1.0)$; or it is not $(\rho = 1.3)$. ASCE 7 Section 12.3.4.2 identifies certain conditions or system features that are judged characteristic of an appropriate level of redundancy and are permitted to use $\rho = 1.0$. Otherwise $\rho = 1.3$.

Copyright © 2011, Fluor Corporation. All Rights Reserved.

FLUOR®

EARTHQUAKE ENGINEERING

Direction Of Loading

ASCE 7 Section 12.5 requires that design seismic forces shall be applied in the direction which will produce the most critical load effect on the structure, its members, and its components. This may be satisfied by the following:

- For round ground-supported vessels, stacks, and tanks, apply 100% of the force in any direction.
- For structures assigned to SDC B, apply the forces independently in the two mutually orthogonal directions.
- For structures assigned to SDC C through F, apply 100% of the forces in one direction with 30% of the forces in the orthogonal direction. Use the direction combination that produces the maximum effect.

Seismic Load Effects

Earthquake ground motions cause seismic load effects (E and E_m) on the individual members of the structure, including axial forces, shear forces, moments, and deflections. These load effects occur in combination with dead loads (D) which are always present and other loads (L, L_r, S, R) periodically present.

The seismic load effect (E) is applicable for every member of the structure.

$$E = E_h + E_v \qquad \text{\{ASCE 7 Eq. 12.4-1\}}$$

$$E = E_h - E_v \qquad \text{\{ASCE 7 Eq. 12.4-2\}}$$

$$E_h = \rho Q_E \qquad \text{\{ASCE 7 Eq. 12.4-3\}}$$

$$E_v = 0.2 S_{DS} D \qquad \text{\{ASCE 7 Eq. 12.4-4\}}$$

Note!!! E_v in Equations 12.4-1 and 12.4-2 may be taken as zero if $S_{DS} \le 0.125$.

Note!!! E_v in Equation 12.4-2 may be taken as zero when considering foundation soil bearing, sliding, and overturning.

The seismic load effect (E_m) is applicable only when specifically invoked by the detailing requirements of either the IBC or ASCE 7, as applicable.

$$E_m = E_{mh} + E_v \qquad \text{\{ASCE 7 Eq. 12.4-5\}}$$

$$E_m = E_{mh} - E_v \qquad \text{\{ASCE 7 Eq. 12.4-6\}}$$

Copyright © 2011, Fluor Corporation. All Rights Reserved.

FLUOR®

EARTHQUAKE ENGINEERING

$$E_{mh} = \Omega_o Q_E \qquad \text{\{ASCE 7 Eq. 12.4-7\}}$$

Note!!! E_v in Equations 12.4-5 and 12.4-6 may be taken as zero if $S_{DS} \leq 0.125$.

Where:

Q_E is the horizontal seismic load effect from the design forces at the base of building structures (V) or the design forces on parts of building structures (F_p).

Analysis Procedure Selection

ASCE 7 Section 12.6 specifies when a dynamic analysis is required. The philosophy underlying this section is that dynamic analysis is always acceptable for design. Static analysis is allowed only under certain conditions of regularity, occupancy, and height.

A dynamic analysis procedure is required for a structure if it is assigned to Seismic Design Category (SDC) D, E, or F and has $T \geq 3.5T_s$.

A dynamic analysis procedure is also required for a structure if it is assigned to Seismic Design Category (SDC) D, E, or F and contains one of the following irregularities:

- Plan Irregularity Type 1a or 1b (See ASCE 7 Table 12.3-1)
- Vertical Irregularity Type 1a, 1b, 2, or 3 (See ASCE 7 Table 12.3-2).

Dynamic analysis procedures include Modal Response Spectrum Analysis (ASCE 7 Section 12.9), Linear Response History Analysis (ASCE 7 Section 16.1), and Nonlinear Response History Analysis (ASCE 7 Section 16.2).

A static analysis procedure is allowed for a structure if a dynamic analysis procedure is not required. Static analysis procedures include the Equivalent Lateral Force Procedure (ASCE 7 Section 12.8) and the Simplified Design Procedure (ASCE 7 Section 12.14).

Note!!! ASCE Seismic Petrochemical Guideline Appendix 4.G provides examples of configurations of typical petrochemical structures where dynamic analysis is recommended.

Fundamental Period, T

The fundamental period (T) for building structures is determined in accordance with ASCE 7 Section 12.8.2. It is preferred that the fundamental period of vibration of the building structure be determined using modal analysis methods and the principles of structural mechanics. However, methods of structural mechanics cannot be employed to

Copyright © 2011, Fluor Corporation. All Rights Reserved.

FLUOR®

EARTHQUAKE ENGINEERING

calculate the vibration period before a building structure has been designed. This section provides an approximate method that can be used to estimate the period with minimal information available on the design. It is based on the use of simple formulas that involve only a general description of the type of building structure (such as steel moment frame, concrete moment frame, shear wall system, braced frame) and overall dimensions (such as height and plan length) to conservatively estimate the period of vibration.

The approximate fundamental period (T_a) is empirically determined, and is prescribed as a function of the building structure period coefficient (C_t), the height of the building structure in feet (h_n), and the building period coefficient (x).

$$T_a = C_t h_n^{\ x} \qquad \text{\{ASCE 7 Eq. 12.8-7\}}$$

Note!!! If determined from a rational analysis, the fundamental period (T) of the structure must satisfy the relationship $T_{\max} < C_u T_a$ where C_u is taken from Table 12.8-1 and T_a is determined from Eq. 12.8-7.

Note!!! The Approximate period equations and the upper limit of the fundamental period $(C_u T_a)$ only apply to building structures. ASCE 7 Section 15.4.4 prohibits their use for nonbuilding structures.

Equivalent Lateral Force (ELF) Procedure

The Equivalent Lateral Force (ELF) Procedure is a static analysis procedure. The basis of the ELF procedure is to calculate the effective earthquake loads in terms of a base shear which is dependent on the structure's mass (effective seismic weight), the imposed ground acceleration, the structure dynamic characteristics, the structure ductility, and the structure importance. The base shear is then applied to the structure as an equivalent lateral load. Once this load is determined and distributed at various elevations of the structure, conventional static analysis techniques may be used to determine the seismic design loads in individual members and connections.

ASCE 7 determines design earthquake forces on a strength basis, allowing direct comparison with the design strength of individual structural members.

$$V = C_s W \qquad \text{\{ASCE 7 Eq. 12.8-1\}}$$

The effective seismic weight (W) includes the total dead load of the structure, weights of attached fixed process equipment and machinery, piping, valves, electrical cable trays, the contents of these items, and selected live and snow loads as prescribed in ASCE 7 Section 12.7.2.

Copyright © 2011, Fluor Corporation. All Rights Reserved.

FLUOR®

EARTHQUAKE ENGINEERING

$$C_s = \frac{S_{DS}}{\left(R/I\right)} \qquad \text{\{ASCE 7 Eq. 12.8-2\}}$$

$$C_s \le \frac{S_{D1}}{T\left(R/I\right)} \text{ when } T \le T_L \qquad \text{\{ASCE 7 Eq. 12.8-3\}}$$

$$C_s \le \frac{S_{D1}T_L}{T^2\left(R/I\right)} \text{ when } T > T_L \qquad \text{\{ASCE 7 Eq. 12.8-4\}}$$

$$C_{s(\min)} = 0.044 S_{DS} I \ge 0.01 \qquad \text{\{ASCE 7 Eq. 12.8-5\}}$$

$$C_{s(\min)} = \frac{0.5S_1}{\left(R/I\right)} \text{ when } S_1 \ge 0.6g \qquad \text{\{ASCE 7 Eq. 12.8-6\}}$$

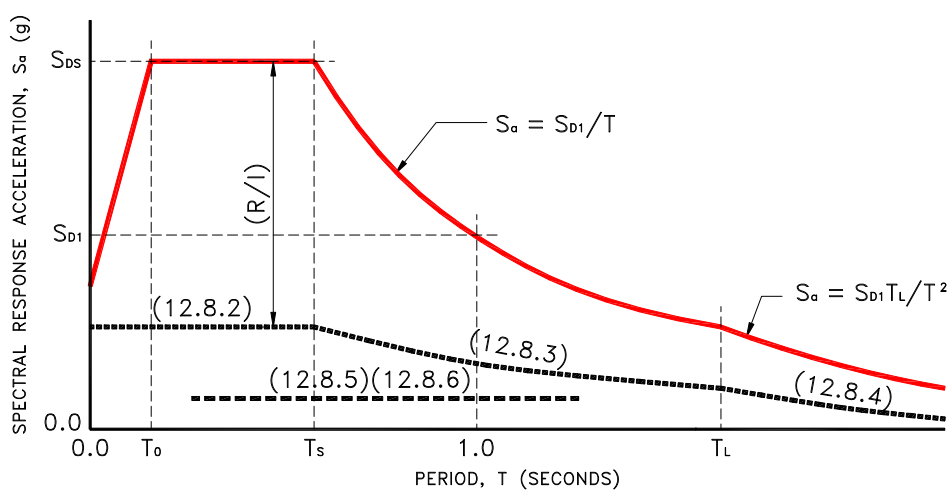

ASCE 7 SEISMIC RESPONSE COEFFICIENT

Vertical Distribution Of Seismic Forces

The distribution of lateral forces over the height of a structure is generally quite complex because these forces are the result of superposition of a number of natural modes of vibration. The relative contributions of these vibration modes to the total forces depends on a number of factors including; shape of the earthquake response spectrum, natural periods of vibration of the structure, and shapes of vibration modes that, in turn, depend on the distribution of mass and stiffness over the structure height.

$$F_x = C_{vx} V \qquad \text{\{ASCE 7 Eq. 12.8-11\}}$$

Copyright © 2011, Fluor Corporation. All Rights Reserved.

FLUOR®

EARTHQUAKE ENGINEERING

$$C_{vx} = \frac{w_x h_x^{\,k}}{\sum_{i=1}^{n} w_i h_i^{\,k}} \qquad \text{\{ASCE 7 Eq. 12.8-12\}}$$

The influence of modes of vibration higher than the fundamental mode is small in the earthquake response of short period structures. In regular structures, the fundamental vibration mode approximates a straight line. The earthquake response of long period structures is influenced by higher modes of vibration. In regular structures, the combined vibration modes approximate a parabola. Linear interpolation of k is used for structures having a fundamental vibration period greater than 0.5 seconds and less than 2.5 seconds.

For $T < 0.5\,\text{sec}$, $k = 1$

For $T > 2.5\,\text{sec}$, $k = 2$

For $0.5\,\text{sec} < T < 2.5\,\text{sec}$, $k = 1.0 + 0.5(T - 0.5)$

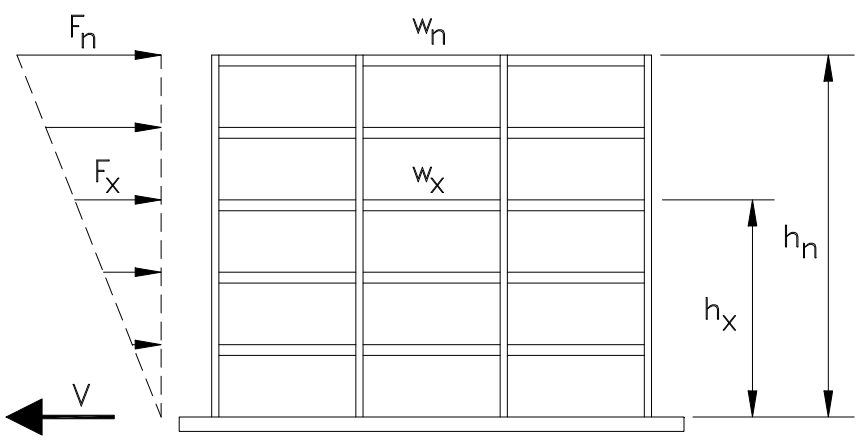

VERTICAL FORCE DISTRIBUTION

Overturning Moments

ASCE 7 Section 12.8.5 requires that the structure-foundation interface be designed to resist overturning moments statically consistent with the design story shears.

$$OTM_{(structure)} = \sum F_x h_x$$

When the seismic design forces are determined in accordance with the Equivalent Lateral Force Procedure, ASCE 7 Section 12.13.4 allows the overturning moment calculated at the foundation-soil interface to be reduced to 75 percent of the calculated value for the structure. This reduction is appropriate because a slight uplifting of one edge of the

Copyright © 2011, Fluor Corporation. All Rights Reserved.

FLUOR®

EARTHQUAKE ENGINEERING

foundation during seismic overturning which leads to a reduction in the overturning moment and because such behavior does not normally cause structural distress.

$$OTM_{(foundation)} = 0.75\left(\sum F_x h_x\right)$$

Note!!! The 75% reduction factor is not permitted for inverted pendulum or cantilevered column structures, such as vertical vessels, or when using the Alternate ASD Basic Load Combinations of IBC Section 1605.3.2.

When the seismic design forces are determined in accordance with the Modal Response Spectrum Analysis, ASCE 7 Section 12.13.4 allows the overturning moment calculated at the foundation-soil interface to be reduced to 90 percent of the calculated value for the structure.

$$OTM_{(foundation)} = 0.90\left(\sum F_x h_x\right)$$

Note!!! The 90% reduction factor is not permitted when using the Alternate ASD Basic Load Combinations of IBC Section 1605.3.2.

Modal Response Spectrum Analysis (MRSA) Procedure

Modal Response Spectrum Analysis (MRSA) Procedure is a dynamic analysis procedure. The basis of MRSA is that the structure's mass (effective seismic weight) and stiffness are carefully modeled, allowing the dynamic analysis of multiple vibration modes, resulting in an accurate, yet still approximate, distribution of the base shear forces throughout the structure. The MRSA shall include sufficient number of modes in order to obtain 90 % mass participation.

The MRSA input ground motion parameters (S_{DS}, S_{D1}) represent the ASCE 7 elastic design response spectrum. To obtain "static force levels", the MRSA force results must be divided by the quantity $\left(R/I\right)$. To obtain "static displacement levels", the MRSA displacement results must be multiplied by the quantity $\left(C_d/I\right)$.

ASCE 7 does not allow you to scale down MRSA force levels to ELF force levels because the ELF procedure may result in an under-prediction of response for structures with significant higher mode participation. On the other hand, when the MRSA base shear is less than 85 percent of the ELF base shear, the MRSA results must be scaled up to no less than 85 percent of the ELF values. This lower limit on the design base shear is imposed primarily to ensure that the design forces are not underestimated through the use of a structural model that is excessively flexible.

$$V_{MRSA} \geq 0.85 V_{ELF}$$

Copyright © 2011, Fluor Corporation. All Rights Reserved.

FLUOR®

EARTHQUAKE ENGINEERING

Note!!! Scaling of MRSA force levels is not required for drift calculations.

Vertical Distribution Of Seismic Forces

The vertical distribution of seismic forces is determined directly within the MRSA.

Overturning Moments

The overturning moments are determined directly within the MRSA.

Drift Limitations

The inelastic deflections at each story x (δ_x) are determined by multiplying the deflections determined from an elastic analysis (δ_{xe}) by the deflection amplification factor (C_d) and dividing by the importance factor (I).

$$\delta_x = \frac{C_d \delta_{xe}}{I} \qquad \text{\{ASCE 7 Eq. 12.8-15\}}$$

The <u>story drift</u> is the difference of the deflections at the top and bottom of the story under consideration $(\delta_x - \delta_{x-1})$. The calculated story drifts should be less than the allowable story drifts (Δ_a) obtained from ASCE 7 Table 12.12-1.

$$\delta_x - \delta_{x-1} \le \Delta_a \quad \text{for most situations}$$

$$\delta_x - \delta_{x-1} \le \frac{\Delta_a}{\rho} \quad \text{for moment frames in SDC D, E, or F}$$

P-Delta Effects

The bending moments in any story are increased by the story drift (Δ) times the gravity load (P) above the story. The ratio of the $P-\Delta$ moment to the lateral force story moment is designated as a stability coefficient (θ). In extreme cases, with large vertical loads, this effect could lead to instability and collapse. $P-\Delta$ effects may be more critical for earthquake forces because the actual structure deflections are normally larger than the calculated deflections.

$$\theta = \frac{P_x \Delta}{V_x h_{sx} C_d} \qquad \text{\{ASCE 7 Eq. 12.8-16\}}$$

$$\theta_{\max} = \frac{0.5}{\beta C_d} \le 0.25 \qquad \text{\{ASCE 7 Eq. 12.8-17\}}$$

Copyright © 2011, Fluor Corporation. All Rights Reserved.

FLUOR®

EARTHQUAKE ENGINEERING

If $\theta < 0.10$ for every story, the $P-\Delta$ effects on story shears and moments and member forces may be ignored.

If $0.10 \le \theta < \theta_{\max}$ for any story, the $P-\Delta$ effects on story drifts, shears, member forces, etc., for the whole structure must be determined by a rational analysis.

Note!!! If a finite element analysis model is made for the structure, it is recommended that the $P-\Delta$ option be enabled.

Torsional Effects

Provisions shall be made for the increase in shears resulting from horizontal torsion for structures with rigid diaphragms. The torsional design moment shall be the moment resulting from the actual eccentricity at each level plus accidental torsion. The actual torsion is due to the calculated eccentricity between the center of rigidity and the center of mass at each level. Accidental torsion is calculated as the product of the lateral force at each level times an eccentricity equal to 5 percent of the building dimension at that level, perpendicular to the direction of the lateral force under consideration.

See ASCE 7 Section 12.8.4.3 for additional torsional requirements.

Note!!! When the mass locations for a petrochemical structure can be determined with reasonable accuracy, no consideration of accidental torsion is necessary.

NONSTRUCTURAL COMPONENTS

This category generally covers equipment supported by a structure, provided that the equipment weighs less than 25% of the combined weight of the equipment and the supporting structure. Examples include vessels supported on a structure. ASCE 7 Chapter 13 addresses these items.

Note!!! ASCE Seismic Petrochemical Guideline Appendix 4.B summarizes the distinction between nonstructural components and nonbuilding structures for typical petrochemical structures and equipment.

Note!!! Stand alone equipment, and equipment in a structure weighing greater than 25% of the combined weight of the equipment and supporting structure is considered a Nonbuilding Structure.

General

The equipment Seismic Design Category (SDC) is the same as the structure SDC.

The component importance factor (I_p) is equal to 1.5 for life-safety equipment and equipment containing hazardous materials. For all other equipment, $I_p = 1.0$.

Copyright © 2011, Fluor Corporation. All Rights Reserved.

FLUOR®

EARTHQUAKE ENGINEERING

Exemptions

The following equipment is exempt from the requirements of ASCE 7 Chapter 13:

- Mechanical and electrical equipment in SDC A and B.
- Mechanical and electrical equipment in SDC C are exempted if $I_p = 1.0$.
- Mechanical and electrical equipment in SDC D and above, with <u>either</u> flexible utility connections <u>or</u> weighing less than 400 pounds and mounted 4 feet or less above the floor are exempted if $I_p = 1.0$.
- Mechanical and electrical equipment in SDC D and above, with flexible utility connections <u>and</u> weighing less than 20 pounds (less than 5 psf for distributive systems) are exempted if $I_p = 1.0$.

Seismic Design Forces

The seismic design force is dependent upon the component acceleration at the point of attachment to the structure, the weight of the equipment (W_p), the component amplification factor (a_p), the component importance factor (I_p), and the component response modification factor (R_p). Elements and components shall be designed for the following design lateral seismic force in any horizontal direction:

$$F_p = \frac{0.4 a_p S_{DS} W_p}{\left(R_p / I_p \right)} \left(1 + 2\frac{z}{h} \right) \qquad \text{\{ASCE 7 Eq. 13.3-1\}}$$

$$F_{p(\max)} = 1.6 S_{DS} I_p W_p \qquad \text{\{ASCE 7 Eq. 13.3-2\}}$$

$$F_{p(\min)} = 0.3 S_{DS} I_p W_p \qquad \text{\{ASCE 7 Eq. 13.3-3\}}$$

- Consider F_p to be a component "base shear" that must be distributed back up to the component center-of-gravity.
- S_{DS} is the same geotechnical input that the supporting structure is designed for.
- The component amplification factor (a_p) represents the dynamic amplification of the component relative to the fundamental period of the structure (T). See ASCE Table 13.6-1.

Copyright © 2011, Fluor Corporation. All Rights Reserved.

FLUOR®

EARTHQUAKE ENGINEERING

- The component response modification factor (R_p) represents the energy absorption capability of the component's structure and attachments. Conceptually, the R_p value considers both the overstrength and deformability of the component's structure and attachments. See ASCE Table 13.6-1.

- $\left(R_p / I_p\right)$ represents the reduction of the design force due to overstrength and ductility of the component and its anchorage.

- $\left(1+2\frac{z}{h}\right)$ represents the amplification of the geotechnical input (S_{DS}) with height in the supporting structure (z), which varies from 1.0 at the structure base to 3.0 at the structure top level (h), with limitations of $0.0 \le \frac{z}{h} \le 1.0$

When Modal Response Spectrum Analysis with $R = 1.0$ is used, ASCE 7 Eq. 13.3-1 may be replaced with the following:

$$F_p = \frac{a_i a_p W_p}{\left(R_p / I_p\right)} A_x \qquad \text{\{ASCE 7 Eq. 13.3-4\}}$$

- a_i is the acceleration at structure level i determined from modal analysis

- A_x is the torsional amplification factor determined from ASCE 7 Section 12.8.

The horizontal seismic design force (F_p) shall be combined with the concurrent vertical force $\pm 0.2 S_{DS} W_p$.

Anchorage

Per ASCE 7 Section 13.4.2, anchors embedded in concrete or masonry shall be proportioned to carry either $1.3F_p$ or the maximum force that can be transferred to the anchor by the equipment or it's support.

Note!!! It is acceptable to provide supplemental reinforcement to transfer the entire $1.3F_p$ seismic design force from the anchors into the concrete member. See ACI 318 Appendix D.

Copyright © 2011, Fluor Corporation. All Rights Reserved.

FLUOR®

EARTHQUAKE ENGINEERING

NONBUILDING STRUCTURES

ASCE 7 defines Nonbuilding Structures as a structure, other than a building. The effective seismic weight (W) should include the normal operating contents of piping and equipment.

Note!!! ASCE Seismic Petrochemical Guideline Appendix 4.B summarizes the distinction between nonstructural components and nonbuilding structures for typical petrochemical structures and equipment.

General

The Occupancy Category and Importance Factor (I) are based on the hazard and function of the contents.

Determine seismic design forces in accordance with the Equivalent Lateral Force Procedure and ASCE 7 Chapter 15, unless a dynamic analysis is required by ASCE 7 Section 12.6.

$$V = C_s W \qquad \text{\{ASCE 7 Eq. 12.8-1\}}$$

Fundamental Period T

The fundamental period determined from ASCE 7 Eqs. 12.8-7 through 12.8-10 are not relevant, or permitted, for nonbuilding structures. It is acceptable to use any method that accurately models the mass and stiffness of the structure, including finite element models and the following:

$$T = 2\pi \sqrt{\frac{\sum_{i-1}^{n} w_i \delta_i^{\,2}}{g \sum_{i=1}^{n} f_i \delta_i}} \qquad \text{\{ASCE 7 Eq. 15.4-6\}}$$

Note!!! ASCE Seismic Petrochemical Guideline Appendix 4.A summarizes fundamental period (T) computations for typical petrochemical structures.

Rigid Nonbuilding Structures

Seismic design forces for rigid nonbuilding structures, defined as those with a fundamental period (T) less than 0.06 seconds, shall be determined as follows:

$$V = 0.30 S_{DS} W I \qquad \text{\{ASCE 7 Eq. 15.4-5\}}$$

Copyright © 2011, Fluor Corporation. All Rights Reserved.

FLUOR®

EARTHQUAKE ENGINEERING

Nonbuilding Structures Similar To Buildings

- ASCE 7 defines Nonbuilding Structures Similar To Buildings as a Nonbuilding Structure that is designed and constructed in a manner similar to buildings, will respond to strong ground motion in a manner similar to buildings, and have basic lateral and vertical seismic force resisting systems similar to buildings. Requirements for building structures apply unless otherwise noted in ASCE 7 Chapter 15.

Drift Limitations

Drift limits for petrochemical nonbuilding structures are different than those prescribed in ASCE 7 for buildings. They should be defined in the Project Design Criteria considering the sensitivity of supported piping and equipment to structural movements.

Equivalent Lateral Force (ELF) Procedure

Select the seismic-force-resisting-system, R, Ω_o, C_d, and height limitations from either ASCE 7 Table 12.2-1 or ASCE 7 Table 15.4-1. Use of ASCE 7 Table 15.4-1 permits selected types of nonbuilding structures which have performed well in past earthquakes to be constructed with less restrictive height limitations in Seismic Design Categories D, E and F than if ASCE 7 Table 12.2-1 is used.

Note!!! ASCE Table 15.4-1, footnotes b, c, and d provide specific requirements for steel pipe racks.

Note!!! ASCE Seismic Petrochemical Guideline Appendix 4.C summarizes R values and applicable base shear equations for typical petrochemical structures.

Determine the seismic response coefficient (C_s) from the following:

$$C_s = \frac{S_{DS}}{\left(R/I\right)} \qquad \text{\{ASCE 7 Eq. 12.8-2\}}$$

$$C_s \le \frac{S_{D1}}{T\left(R/I\right)} \text{ when } T \le T_L \qquad \text{\{ASCE 7 Eq. 12.8-3\}}$$

$$C_s \le \frac{S_{D1}T_L}{T^2\left(R/I\right)} \text{ when } T > T_L \qquad \text{\{ASCE 7 Eq. 12.8-4\}}$$

Copyright © 2011, Fluor Corporation. All Rights Reserved.

FLUOR®

EARTHQUAKE ENGINEERING

$$C_{s(\min)} = 0.044 S_{DS} I \geq 0.01 \qquad \text{\{ASCE 7 Eq. 12.8-5\}}$$

$$C_{s(\min)} = \frac{0.5 S_1}{\left(R/I\right)} \text{ when } S_1 \geq 0.6g \qquad \text{\{ASCE 7 Eq. 12.8-6\}}$$

All structural steel systems in SDC's D, E, and F, regardless of R value require seismic detailing in accordance with AISC 341 (See IBC Section 2205.2.2).

Exception: Steel ordinary moment frames with $R = 1$ and steel ordinary concentrically braced frames with $R = 1.5$ do not require seismic detailing in accordance with AISC 341 (See ASCE 7 Table 15.4-1).

Pipe Racks

Redundancy – Pipe Racks In SDC D, E, or F

The typical pipe rack has no horizontal bracing system that would serve as a diaphragm. If one individual frame fails, there is no load path for lateral force transfer to the adjacent frame. As a result, each frame must be treated as an individual structure.

- For transverse moment-frame to qualify for $\rho = 1.0$, it would need to have at least 4 columns and 3 bays at each level. This would ensure that the loss of moment resistance at both ends of a single beam would not result in more than a 33% loss of story strength. Otherwise $\rho = 1.3$.

- For an individual longitudinal braced frame to qualify for $\rho = 1.0$, it would need to have at least 2 bays of chevron bracing (or 4 individual braces) at each level on each frame line. This would ensure that the loss of an individual brace or connection would not result in more than a 33% loss of story strength. Otherwise $\rho = 1.3$.

If the pipe rack is provided with a horizontal bracing system that would serve as a diaphragm and provide a load path for lateral transfer, the pipe rack can be treated as a single structure.

- For transverse moment-frame to qualify for $\rho = 1.0$, it would need to have at least 4 transverse frames. Otherwise $\rho = 1.3$.

- For an individual longitudinal braced frame to qualify for $\rho = 1.0$, it would need to have 2 individual braces at each level on each frame line. Otherwise $\rho = 1.3$.

Copyright © 2011, Fluor Corporation. All Rights Reserved.

FLUOR®

EARTHQUAKE ENGINEERING

Open-Equipment Structures

Redundancy - Open Equipment Structures In SDC D, E, or F

The typical open equipment structure has insufficient horizontal bracing system that would serve as a diaphragm. If one individual frame fails, there is no load path for lateral force transfer to the adjacent frame. As a result, each frame must be treated as an individual structure.

- For a moment-frame to qualify for $\rho = 1.0$, it would have to have 4 columns and 3 bays at each level on each frame line. This would ensure that the loss of moment resistance at both ends of a single beam would not result in more than a 33% loss of story strength. Otherwise $\rho = 1.3$.

- For a braced frame to qualify for $\rho = 1.0$, it would have to have 2 bays of chevron bracing (or 4 individual braces) at each level on each frame line. This would ensure that the loss of an individual brace or connection would not result in more than a 33% loss of story strength. Otherwise $\rho = 1.3$.

Nonbuilding Structures Not Similar To Buildings

Equivalent Lateral Force (ELF) Procedure

Select the nonbuilding structure type, R, Ω_o, C_d, and height limitations from ASCE 7 Table 15.4-2.

Note!!! ASCE Seismic Petrochemical Guideline Appendix 4.C summarizes R values and applicable base shear equations for typical petrochemical structures.

Determine the seismic response coefficient (C_s) from the following:

$$C_s = \frac{S_{DS}}{\left(R/I\right)} \qquad \text{\{ASCE 7 Eq. 12.8-2\}}$$

$$C_s \le \frac{S_{D1}}{T\left(R/I\right)} \text{ when } T \le T_L \qquad \text{\{ASCE 7 Eq. 12.8-3\}}$$

$$C_s \le \frac{S_{D1}T_L}{T^2\left(R/I\right)} \text{ when } T > T_L \qquad \text{\{ASCE 7 Eq. 12.8-4\}}$$

Copyright © 2011, Fluor Corporation. All Rights Reserved.

FLUOR®

EARTHQUAKE ENGINEERING

$$C_{s(\min)} = 0.044 S_{DS} I \geq 0.03 \qquad \text{\{ASCE 7 Eq. 15.4-1\}}$$

$$C_{s(\min)} = \frac{0.8 S_1}{\left(R/I\right)} \text{ when } S_1 \geq 0.6g \qquad \text{\{ASCE 7 Eq. 15.4-2\}}$$

Tanks and Vessels designed to appropriate national standards may use the following equations to determine $C_{s(\min)}$.

$$C_{s(\min)} = 0.044 S_{DS} I \geq 0.01 \qquad \text{\{ASCE 7 Eq. 15.4-3\}}$$

$$C_{s(\min)} = \frac{0.5 S_1}{\left(R/I\right)} \text{ when } S_1 \geq 0.6g \qquad \text{\{ASCE 7 Eq. 15.4-4\}}$$

Horizontal Vessels And Heat Exchangers

General

Distribute design seismic forces (V):

- In the transverse direction, in proportion to the gravity forces supported by the fixed and sliding ends.
- In the longitudinal direction, 100% to the fixed end and 60% to the sliding end.
- If the fixed location is not established at the time of design, apply 100% at each end.

Determine design seismic forces (V):

- For equipment, equipment saddles, and equipment saddle connection to anchor bolts, consider the equipment weight.
- For concrete piers and foundations, consider the equipment weight plus the weight of the piers and foundation.

Determine seismic load effects (E):

- For equipment, equipment saddles, and equipment saddle connection to anchor bolts, use $\rho = 1.0$.
- For concrete piers and foundations in SDC B and C, use $\rho = 1.0$.

Copyright © 2011, Fluor Corporation. All Rights Reserved.

FLUOR®

EARTHQUAKE ENGINEERING

- For concrete piers and foundations in SDC D, E, and F, use $\rho = 1.3$.

The design tension strength of anchor bolts shall be the lesser of that required by ACI 318 Appendix D, 2.5 times the calculated design tension force, or 0.4 times the design strength.

Note!!! This will be clarified in the next edition of ASCE 7.

- Anchor bolt gauge (stretched) length shall not be less than either eight bolt diameters.

- Design the concrete embedment in accordance with ACI 318 Appendix D.

Horizontal Vessels And Heat Exchangers Supported Directly At Grade In SDC D, E, Or F

Consider a horizontal vessel or heat exchanger (equipment) as a horizontal, saddle supported welded steel vessel.

- If the system is considered rigid $(T < 0.06\,\text{sec})$, determine the design seismic force in accordance with ASCE 7 Section 15.4.2.

- If the system is considered not rigid $(T > 0.06\,\text{sec})$, select the equipment design coefficients from ASCE 7 Table 15.4-2 $(R = 3, \Omega_o = 2)$.

Horizontal Vessels And Heat Exchangers Supported On Concrete Piers Directly At Grade In SDC D, E, Or F

Consider a horizontal vessel or heat exchanger (equipment) as a nonbuilding structure supported by another structure per ASCE 7 Section 15.3.2. Consider the equipment to have rigid characteristics and model as a combined system with the supporting structure per Item 2. Select the equipment design coefficients from ASCE 7 Table 15.4-2 and the structure design coefficients from ASCE 7 Table 12.2-1. Design the combined system for the lesser R value and the corresponding Ω_o value.

In the transverse direction, consider the combined system as a horizontal saddle supported welded steel vessel $(R = 3, \Omega_o = 2)$ supported by a special reinforced concrete shear wall $(R = 5, \Omega_o = 2.5)$.

- Design the vessel and vessel saddles for $R = 3.0$ without the overstrength factor.

- Design the vessel attachment to the anchor bolts for $R = 3.0$ and $\Omega_o = 2.0$.

- Design the anchor bolts for $R = 3.0$ without the overstrength factor.

Copyright © 2011, Fluor Corporation. All Rights Reserved.

FLUOR®

EARTHQUAKE ENGINEERING

- Design the concrete pier for $R = 3.0$ without the overstrength factor. Detail as special reinforced concrete shear walls.

  Note!!! See ACI 318, Chapter 21 for detailing requirements for special structural walls. Special boundary elements will not be required if the piers are sized such that $M_u \le 0.2 f'_c S_m$.

- Design the foundation for $R = 3.0$ without the overstrength factor.

In the longitudinal direction, consider the combined system as a horizontal saddle supported welded steel vessel $(R = 3, \Omega_o = 2)$ supported by a cantilever column system detailed to conform to the requirements for special reinforced concrete moment frames $(R = 2.5, \Omega_o = 1.25)$.

- Design the vessel and vessel saddles for $R = 2.5$ without the overstrength factor.

- Design the vessel attachment to the anchor bolts for $R = 2.5$ and $\Omega_o = 1.25$.

- Design the anchor bolts for $R = 2.5$ without the overstrength factor.

- Design the concrete pier for $R = 2.5$. Detail as special reinforced concrete moment frames.

  Note!!! See ACI 318, Chapter 21 for detailing requirements for special moment frames. Transverse shear reinforcement will not be required if the piers are sized such that $V_u \le 1.0\sqrt{f'_c} b_w d$. Requirements for frame members subject to bending and axial load will not apply if the piers are sized such that $P_u \le 0.1 A_g f'_c$.

- Design the foundation for $R = 2.5$ without the overstrength factor.

Skirt Supported Vertical Vessels

Seismic Coefficients

- In all cases, $\Omega_o = 2$, $C_d = 2$.

- In all cases, $R = 2$ is permitted.

- In Occupancy Category IV, the vessel skirt evaluation requirements of ASCE 7 Sec. 15.7.10.5 a and b must be met.

Copyright © 2011, Fluor Corporation. All Rights Reserved.

FLUOR®

EARTHQUAKE ENGINEERING

- $R = 3$ is permitted if the vessel skirt evaluation requirements of ASCE 7 Sec. 15.7.10.5 a and b are met.

Skirt Design

- Determine skirt shear and axial forces using IBC Sec. 1605 load combinations that do not consider overstrength.
- In Occupancy Categories II or III, $R = 2$ is permitted.
- In Occupancy Category IV or if $R = 3$ is selected, the evaluation requirements of ASCE 7 Sec. 15.7.10.5 a and b must be met.

Chair Design

- Determine tension forces using the overstrength load combinations of ASCE 7 Sec. 12.4.3. $\Omega_o Q_E$ should be taken as the lesser of $A_{se} f_{uta}$ as defined in ACI 318 Appendix D or Ω_o times the calculated anchor design force.
- Determine shear forces using IBC Sec. 1605 load combinations that do not consider overstrength.

Anchor Bolt Design

- Determine tension and shear forces using standard IBC load combinations that do not consider overstrength.
- Provide an anchor bolt stretched length (gauge length) not less than 8 bolt diameters.
- Design the concrete embedment in accordance with ACI 318 Appendix D to develop the steel strength of the anchor, 2.5 times the design load or 0.40 times the design strength.
- At the vessel-to-foundation interface, the shear friction resistance associated with the normal force (from 90% of vessel weight plus vessel seismic overturning moment) may be used to resist the design shear force. If the shear friction force is not sufficient, design the anchor bolts for shear forces using the overstrength load combinations of ASCE 7 Sec. 12.4.3 with no contribution from shear friction resistance.

  Note!!! This is a judgmental interpretation of IBC and ASCE 7, which are largely silent on the vessel-to-foundation interface.

Copyright © 2011, Fluor Corporation. All Rights Reserved.

FLUOR®

EARTHQUAKE ENGINEERING

Foundation And Pile Design

- For foundation and pile design, add to the vessel base shear the quantity $0.30 S_{DS} IW_{foundation}$ applied at the foundation center-of-mass.
- Size foundations and piles using IBC Sec. 1605 load combinations that do not consider overstrength.
- Design pile connections to the foundation using the overstrength load combinations of ASCE 7 Sec. 12.4.3.

Note!!! IBC Chapter 18 prescribes additional seismic requirements for foundations.

Grade Supported Flat-Bottom Tanks

Performance of flat bottom storage tanks in past earthquakes has indicated that sloshing of contents can cause leakage and roof damage. This damage can be prevented or significantly mitigated by providing a freeboard which is greater than the calculated slosh height, or by designing the roof and wall connections for the sloshing wave forces.

It is conservative and uneconomical to assume that the contents are rigid because it ignores the sloshing effect. The correct and economical approach is to include the sloshing effect. Industry design procedures (e.g., ASCE Guidelines, ACI 350.3, API 650, and AWWA D100) consider separate response modes of the tank and its contents:

- The impulsive component is the relatively high-frequency amplified response to lateral ground motion of the tank shell and roof, together with the portion of the liquid contents that move in unison with the shell.
- The convective component is the relatively low frequency amplified response of the portion of the liquid contents that moves in the fundamental sloshing mode.

REFERENCES

American Concrete Institute (ACI), ACI 318, Building Code Requirements For Structural Concrete, 2008.

American Concrete Institute (ACI), ACI 350.3, Seismic Design Of Liquid-Containing Concrete Structures, 2006.

American Institute of Steel Construction (AISC), AISC 341-05, Seismic Provisions For Structural Steel Buildings, Including Supplement No. 1, November 16, 2005.

American Petroleum Institute (API), API 650, Welded Steel Tanks for Oil Storage, 10th Edition, 2007.

Copyright © 2011, Fluor Corporation. All Rights Reserved.

FLUOR®

EARTHQUAKE ENGINEERING

American Society of Civil Engineers (ASCE), Guidelines for Seismic Evaluation and Design of Petrochemical Facilities, 2011.

American Society of Civil Engineers (ASCE), ASCE 7-05, Minimum Design Loads For Buildings And Other Structures, Including Supplements No. 1 and No. 2, 2006.

American Water Works Association (AWWA), AWWA D100-05, Welded Carbon steel Tanks For Water Storage, 2006.

Federal Emergency Management Agency (FEMA), FEMA 450-2, NEHRP Recommended Provisions For Seismic Regulations For New Buildings And Other Structures, Part 2: Commentary, 2004.

International Code Council (ICC), International Building Code (IBC), 2006.

International Code Council (ICC), International Building Code (IBC), 2009.

Process Industry Practices (PIP), PIP STC01015, Structural Design Criteria, September, 2007.

ATTACHMENTS

Attachment 01	Sample Design 1 - Design Response Spectrum (25Aug11)
Attachment 02	Sample Design 2 - Building Structure (25Aug11)
Attachment 03	Sample Design 3 - Equipment (25Aug11)
Attachment 04	Sample Design 4 - Vertical Vessel At Grade (Uniform Properties) (25Aug11)
Attachment 05	Sample Design 5 - Vertical Vessel At Grade (Varying Properties) (25Aug11)
Attachment 06	Sample Design 6 - Horizontal Vessel On Piers(25Aug11)
Attachment 07	Sample Design 7 - Steel Pipe Support - Transverse Direction (25Aug11)

Copyright © 2011, Fluor Corporation. All Rights Reserved.

FLUOR®

EARTHQUAKE ENGINEERING

Sample Design 1: Design Response Spectra

GIVEN:

The following parameters are given in the project geotechnical report for a property in Irvine, California.

Site Class D

$$S_s = 1.554g$$

$$S_1 = 0.547g$$

$$T_L = 8\,\text{sec}$$

REQUIRED:

Construct the ASCE 7 design response spectrum.

SOLUTION:

Adjusted MCE Parameters

For Site Class D and $S_s = 1.554g$: $F_a = 1.0$ {ASCE 7 Table 11.4-1}

For Site Class D and $S_1 = 0.547g$: $F_v = 1.5$ {ASCE 7 Table 11.4-2}

$$S_{MS} = F_a S_S = (1.0)(1.554g) = 1.554g$$ {ASCE 7 Eq. 11.4-1}

$$S_{M1} = F_v S_1 = (1.5)(0.547g) = 0.820g$$ {ASCE 7 Eq. 11.4-2}

Design Spectral Acceleration Parameters

$$S_{DS} = \frac{2}{3} S_{MS} = \frac{2}{3}(1.554g) = 1.036g$$ {ASCE 7 Eq. 11.4-3}

$$S_{D1} = \frac{2}{3} S_{M1} = \frac{2}{3}(0.820g) = 0.547g$$ {ASCE 7 Eq. 11.4-4}

Design Response Spectrum

$$T_o = 0.2\frac{S_{D1}}{S_{DS}} = 0.2\frac{0.547g}{1.036g} = 0.11\,\text{sec}$$ {ASCE 7 Sec. 11.4.5}

$$T_s = \frac{S_{D1}}{S_{DS}} = \frac{0.547g}{1.036g} = 0.53\,\text{sec}$$ {ASCE 7 Sec. 11.4.5}

Copyright © 2011, Fluor Corporation. All Rights Reserved.

FLUOR®

EARTHQUAKE ENGINEERING

Sample Design 1: Design Response Spectra

For $T < 0.11$:

$$S_a = S_{DS}\left(0.4 + 0.6\frac{T}{T_o}\right) = (1.036g)\left(0.4 + 0.6\frac{T}{0.11}\right) = 0.414 + 5.45T \qquad \text{\{ASCE 7 Eq. 11.4-5\}}$$

For $0.11 < T < 0.53$:

$$S_a = S_{DS} = 1.036g \qquad \text{\{ASCE 7 Sec. 11.4.5\}}$$

For $0.53 < T < 8$:

$$S_a = \frac{S_{D1}}{T} = \frac{0.547g}{T} \qquad \text{\{ASCE 7 Eq. 11.4-6\}}$$

For $8 < T$:

$$S_a = \frac{S_{D1}T_L}{T^2} = \frac{(0.547g)(8)}{T^2} = \frac{4.376g}{T^2} \qquad \text{\{ASCE 7 Eq. 11.4-7\}}$$

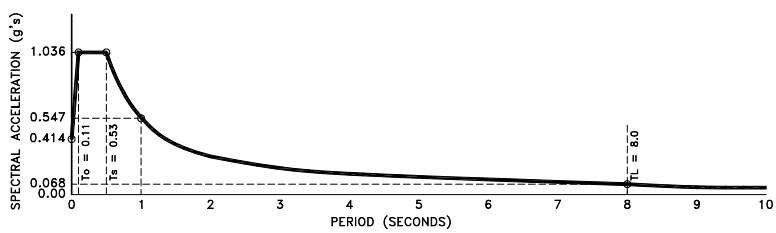

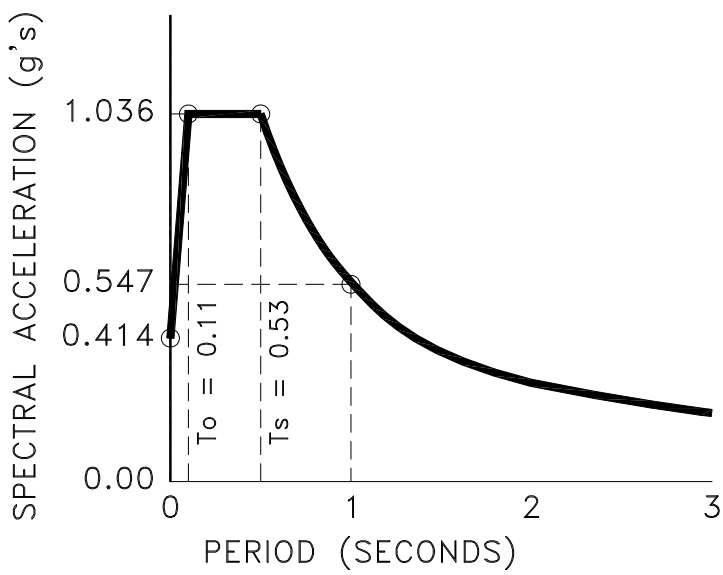

Copyright © 2011, Fluor Corporation. All Rights Reserved.

FLUOR®

EARTHQUAKE ENGINEERING

Sample Design 2: Building Structure

In this example, base shear, story forces, story shears, and overturning moments are determined for a building structure. The calculations would be very similar for a nonbuilding structure similar to buildings.

GIVEN:

SPECIAL STEEL MOMENT FRAME
OCCUPANCY CATEGORY II
GEOTECHNICAL
SITE CLASS D
S_S = 1.50
S_1 = 0.70
T_L = 8 SEC.

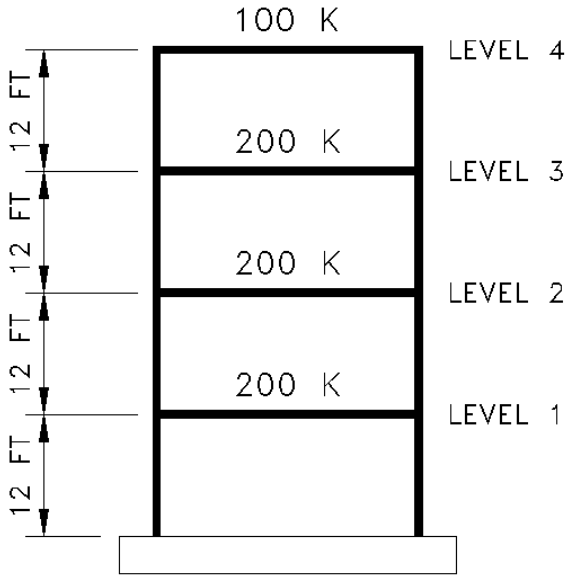

REQUIRED:

Using the Equivalent Lateral Force (ELF) procedure, determine the base shear, vertical distribution of seismic forces, and seismic load effects.

SOLUTION:

Effective Seismic Weight

$W = 100 + 200 + 200 + 200 = 700\,K$

Importance Factor

For Occupancy Category II: $I = 1.0$ {ASCE 7 Table 11.5-1}

Copyright © 2011, Fluor Corporation. All Rights Reserved.

FLUOR®

EARTHQUAKE ENGINEERING

Sample Design 2: Building Structure

Adjusted MCE parameters

For Site Class D and $S_s = 1.50$: $F_a = 1.00$ {ASCE 7 Table 11.4-1}

For Site Class D and $S_1 = 0.70$: $F_v = 1.5$ {ASCE 7 Table 11.4-2}

$S_{MS} = F_a S_S = (1.00)(1.50) = 1.50$ {ASCE 7 Eq. 11.4-1}

$S_{M1} = F_v S_1 = (1.5)(0.70) = 1.05$ {ASCE 7 Eq. 11.4-2}

Design Spectral Acceleration Parameters

$S_{DS} = \frac{2}{3} S_{MS} = \frac{2}{3}(1.50) = 1.00$ {ASCE 7 Eq. 11.4-3}

$S_{D1} = \frac{2}{3} S_{M1} = \frac{2}{3}(1.05) = 0.70$ {ASCE 7 Eq. 11.4-4}

Seismic Design Category

$S_1 = 0.70 \le 0.75g$, determine SDC in accordance with tables

$0.50 \le S_{DS} = 1.00g$ and Occupancy Category = II

SDC Based on S_{DS} is equal to D {ASCE 7 Table 11.6-1}

$0.20 \le S_{D1} = 0.70g$ and Occupancy Category = II

SDC Based on S_{D1} is equal to D {ASCE 7 Table 11.6-2}

Seismic Design Category = D

Response Modification Coefficient

For Steel SMF: $R = 8$ {ASCE 7 Table 12.3-1}

There are no height limitations for Steel SMF in SDC D {ASCE 7 Table 12.3-1}

Structure Period

For Steel SMF: $C_t = 0.028$ {ASCE 7 Table 12.8-2}

For Steel SMF: $x = 0.8$ {ASCE 7 Table 12.8-2}

$T_a = C_t h_n^{\ x} = (0.028)(48\ ft)^{0.8} = 0.62\,\text{sec}$ {ASCE 7 Eq. 12.8-7}

Copyright © 2011, Fluor Corporation. All Rights Reserved.

FLUOR®

EARTHQUAKE ENGINEERING

Sample Design 2: Building Structure

Seismic Response Coefficient

$$C_s = \frac{S_{DS}}{\left(R/I\right)} = \frac{1.00}{\left(8/1\right)} = 0.125 \quad \underline{\text{governs}}$$ {ASCE 7 Eq. 12.8-2}

$$C_s \le \frac{S_{D1}}{T\left(R/I\right)} = \frac{0.70}{\left(0.62\,\text{sec}\right)\left(8/1\right)} = 0.141$$ {ASCE 7 Eq. 12.8-3}

$0.62\,\text{sec} = T < T_L = 8\,\text{sec}$, <u>need not consider ASCE 7 Eq. 12.8-4</u>

$$C_{s(\min)} = 0.044 S_{DS} I \ge 0.01$$ {ASCE 7 Eq. 12.8-5}

$$= 0.044(1.00)(1.0) = 0.044$$

$S_1 = 0.70 > 0.6$, <u>must consider Eq. 12.8-6</u>

$$C_{s(\min)} = \frac{0.5 S_1}{\left(R/I\right)} = \frac{0.5(0.70)}{\left(8/1\right)} = 0.044$$ {ASCE 7 Eq. 12.8-6}

Base Shear

$$V = C_s W = (0.125)(700\,K) = 87.5\,K$$ {ASCE 7 Eq. 12.8-1}

V = 87.5 K

Vertical Distribution Of Seismic Forces

For $0.5\,\text{sec} < T < 2.5\,\text{sec}$:

$$k = 1.0 + 0.5(T - 0.5) = 1.0 + 0.5(0.62 - 0.5) = 1.06$$

$$C_{vx} = \frac{w_x h_x^{\,k}}{\sum_{i=1}^{n} w_i h_i^{\,k}}$$ {ASCE 7 Eq. 12.8-12}

$$F_x = C_{vx} V = C_{vx}(200.2\,K)$$ {ASCE 7 Eq. 12.8-11}

Level i	w_x (Kips)	h_x (ft)	$w_x h_x^{\,k}$ (ft-K)	C_{vx}	F_x (Kips)	Story Shear (Kips)
4	100	48	6055	0.257	22.5	22.5
3	200	36	8927	0.379	33.2	55.7
2	200	24	5808	0.246	21.5	77.2
1	200	12	2786	0.118	10.3	87.5
$\Sigma =$	**700**	$\Sigma =$	**23576**	**1.000**	**87.5**	

Copyright © 2011, Fluor Corporation. All Rights Reserved.

FLUOR®

EARTHQUAKE ENGINEERING

Sample Design 2: Building Structure

Redundancy Factor

It is assumed that ρ = 1.3

Seismic Load Effects

$E = E_h + E_v$ {ASCE 7 Eq. 12.4-1}

$E = E_h - E_v$ {ASCE 7 Eq. 12.4-2}

$Q_E = V = 87.5\,K$ {ASCE 7 Sec. 12.4.2.1}

$E_h = \rho Q_E = (1.3)(87.5\,K) = 114\,K$ {ASCE 7 Eq. 12.4-3}

E_h = 114 K

The Effective Seismic Weight is treated the same as a Dead Load

$E_v = 0.2 S_{DS} D = 0.2(1.00)(700\,K) = 140\,K$ {ASCE 7 Eq. 12.4-4}

E_v = 140 K

Copyright © 2011, Fluor Corporation. All Rights Reserved.

FLUOR®

EARTHQUAKE ENGINEERING

Sample Design 3: Equipment

GIVEN:

A fin-fan is located at the top level of a pipe rack.

$W_{fan} = 10\,K$

$W_{structure\,\&\,piping} = 50\,K$

$S_{DS} = 1.30$

REQUIRED:

Determine the seismic design force and seismic load effects for the fin-fan attachment to the pipe rack.

SOLUTION:

Seismic Design Force

The weight of the fin-fan is less than 25% of the total weight of the pipe rack, piping, and fin fan. The seismic design force for the fin-fan (F_p) is determined in accordance with ASCE 7 Chapter 13.

$I_p = 1.00$ {ASCE 7 Section 13.1.3}

$\frac{z}{h} = 1.0$ {equipment at structure's highest level}

$a_p = 2.5$ for air-side fans {ASCE 7 Table 13.6-1}

$R_p = 6.0$ for air-side fans {ASCE 7 Table 13.6-1}

$$F_p = \frac{0.4 a_p S_{DS} W_p}{\left(R_p / I_p\right)}\left(1 + 2\frac{z}{h}\right) = \frac{0.4(2.5)(1.30)(10.0\,K)}{\left(6.0/1.00\right)}\left[1 + 2(1)\right] = 6.50\,K \quad \underline{\text{governs}}$$ {ASCE 7 Eq. 13.3-1}

$F_{p(\max)} = 1.6 S_{DS} I_p W_p = 1.6(1.30)(1.00)(10.0\,K) = 20.8\,K$ {ASCE 7 Eq. 13.3-2}

$F_{p(\min)} = 0.3 S_{DS} I_p W_p = 0.3(1.30)(1.00)(10.0\,K) = 3.90\,K$ {ASCE 7 Eq. 13.3-3}

F_p = 6.50K

Copyright © 2011, Fluor Corporation. All Rights Reserved.

FLUOR®

EARTHQUAKE ENGINEERING

Sample Design 3: Equipment

Seismic Load Effects

$E = E_h + E_v$ {ASCE 7 Eq. 12.4-1}

$E = E_h - E_v$ {ASCE 7 Eq. 12.4-2}

$Q_E = F_p = 6.50\,K$ {ASCE 7 Sec. 12.4.2.1}

$\rho = 1.0$ for design of nonstructural components {ASCE 7 Sec. 12.3.4.1}

$E_h = \rho Q_E = (1.0)(6.50\,K) = 6.50K$ {ASCE 7 Eq. 12.4-3}

E_h = 6.50 K

The Component Operating Weight is treated the same as a Dead Load

$E_v = 0.2 S_{DS} D = 0.2(1.30)(10\,K) = 2.60\,K$ {ASCE 7-05 Eq. 12.4-4}

E_v = 2.60 K

Copyright © 2011, Fluor Corporation. All Rights Reserved.

FLUOR®

EARTHQUAKE ENGINEERING

Sample Design 4: Vertical Vessel At Grade (Uniform Properties)

In this example, the seismic inertial forces due to the weight of the foundation are relatively small and are therefore neglected. For calculation purposes, the base is assumed to be located at the top of the pier. The weight of the skirt-supported vessel is regarded as uniformly distributed over its height.

GIVEN:

Operating Weight $= 150\,K$

$I = 1.25$

Site Classification $= D$

$S_s = 1.10$

$S_1 = 0.50$

$T_L = 8\,\text{sec}$

Skirt

Welded steel, with special detailing

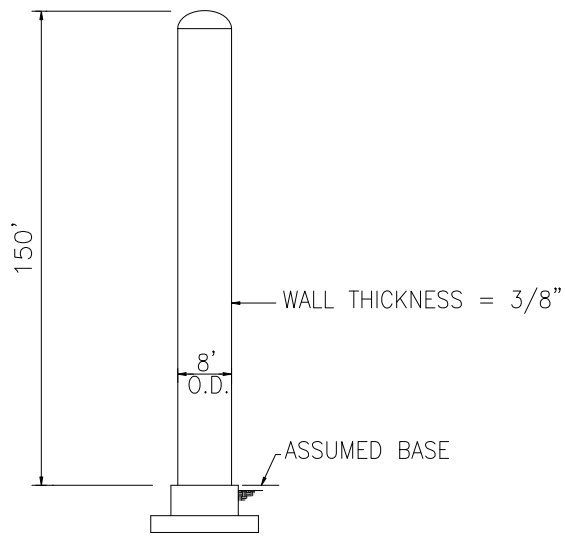

VERTICAL VESSEL

REQUIRED:

Using the Equivalent Lateral Force (ELF) procedure, determine the base shear and seismic load effects.

SOLUTION:

Adjusted MCE Parameters

For Site Class D and $S_s = 1.10$: $F_a = 1.06$ {ASCE 7 Table 11.4-1}

For Site Class D and $S_1 = 0.50$: $F_v = 1.5$ {ASCE 7 Table 11.4-2}

$S_{MS} = F_a S_S = (1.06)(1.10) = 1.166$ {ASCE 7 Eq. 11.4-1}

$S_{M1} = F_v S_1 = (1.5)(0.50) = 0.75$ {ASCE 7 Eq. 11.4-2}

Design Spectral Acceleration Parameters

$S_{DS} = \frac{2}{3} S_{MS} = \frac{2}{3}(1.166) = 0.78$ {ASCE 7 Eq. 11.4-3}

$S_{D1} = \frac{2}{3} S_{M1} = \frac{2}{3}(0.75) = 0.50$ {ASCE 7 Eq. 11.4-4}

Copyright © 2011, Fluor Corporation. All Rights Reserved.

FLUOR®

EARTHQUAKE ENGINEERING

Sample Design 4: Vertical Vessel At Grade (Uniform Properties)

Period

This example will consider only the operating condition; other conditions (such as Empty) may also need consideration in actual design.

$$w = \frac{150\,K}{150\,ft} = 1.00\,K/\,ft$$

$$I = \frac{\pi D_{mean}{}^3 t}{8} = \frac{\pi(95.625\,in)^3(0.375\,in)}{8} = 128767\,in^4$$

$$T = 1.79\sqrt{\frac{wH^4}{EIg}} = 1.79\sqrt{\frac{(1.00\,K/\,ft)(150\,ft)^4(1728\,in^3/\,ft^3)}{(29000\,ksi)(128767^4)(386.4\,in/\sec^2)}} = 1.39\sec$$

Seismic Response Coefficient

Vertical vessel at grade is considered to be a Nonbuilding Structure Not Similar To Buildings

$R = 3$, for skirt-supported vessel, welded steel with special detailing {ASCE 7 Table 15.4-2}

$$C_s = \frac{S_{DS}}{\left(R/I\right)} = \frac{0.78}{\left(3/1.25\right)} = 0.325$$ {ASCE 7 Eq. 12.8-2}

$$C_s \le \frac{S_{D1}}{T\left(R/I\right)} = \frac{0.50}{(1.39\sec)\left(3/1.25\right)} = 0.150$$ <u>governs</u> {ASCE 7 Eq. 12.8-3}

$1.39\sec = T < T_L = 8\sec$, <u>need not consider ASCE 7-05 Eq. 12.8-4</u>

$$C_{s(\min)} = 0.044 S_{DS} I \ge 0.01$$ {ASCE 7 Eq. 15.4-3}

$$= 0.044(0.78)(1.25) = 0.043$$

$S_1 < 0.6$ <u>need not consider Eq. 15.4-4</u>

Base Shear

$$V = C_s W = (0.150)(150\,K) = 22.5\,K$$ {ASCE 7 Eq. 12.8-1}

Overturning At Base

Assume that base shear is centered at 3/4 of the vessel height

$$OTM = (22.5K)\left(3/4\right)(150\,ft) = 2531\,ft-K$$

Copyright © 2011, Fluor Corporation. All Rights Reserved.

FLUOR®

EARTHQUAKE ENGINEERING

Sample Design 4: Vertical Vessel At Grade (Uniform Properties)

Foundation Overturning

Structure was analyzed using the Equivalent Lateral Force Procedure.

Structure is an inverted cantilever structure. No reduction in foundation overturning is permitted.

$OTM = 2531\ ft - K$

Redundancy Factor

$\rho = 1.0$ for nonbuilding structures not similar to buildings {ASCE 7 Sec. 12.3.4.1}

Seismic Load Effects

$E = E_h + E_v$ {ASCE 7 Eq. 12.4-1}

$E = E_h - E_v$ {ASCE 7 Eq. 12.4-2}

$Q_E = V = 22.5K$ {ASCE 7 Sec. 12.4.2.1}

$E_h = \rho Q_E = (1.0)(22.5K) = 22.5K$ {ASCE 7 Eq. 12.4-3}

E_h = 22.5 K

The Effective Seismic Weight is treated the same as a Dead Load

$E_v = 0.2S_{DS}D = 0.2(0.78)(150K) = 23.4K$ {ASCE 7 Eq. 12.4-4}

E_v = 23.4 K

Copyright © 2011, Fluor Corporation. All Rights Reserved.

FLUOR®

EARTHQUAKE ENGINEERING

Sample Design 5: Vertical Vessel At Grade (Varying Properties)

GIVEN:

Design Data

$I = 1.25$

Site Classification $= D$

$S_s = 1.50$

$S_1 = 0.75$

$T_L = 8\,\text{sec}$

Level 3

$O.D. = 8'\text{–}0''$

$w_{operating} = 1.8\,K/\,ft$

$t = \frac{3}{8}in$

Level 2

$O.D. = 5'\text{–}6''$

$w_{operating} = 1.2\,K/\,ft$

$t = \frac{1}{2}in$

Level 1

$O.D. = 5'\text{–}6''$

$w_{operating} = 0.9/\,ft$

$t = \frac{5}{16}in$

Reboiler (RB)

$W = 8\,K$

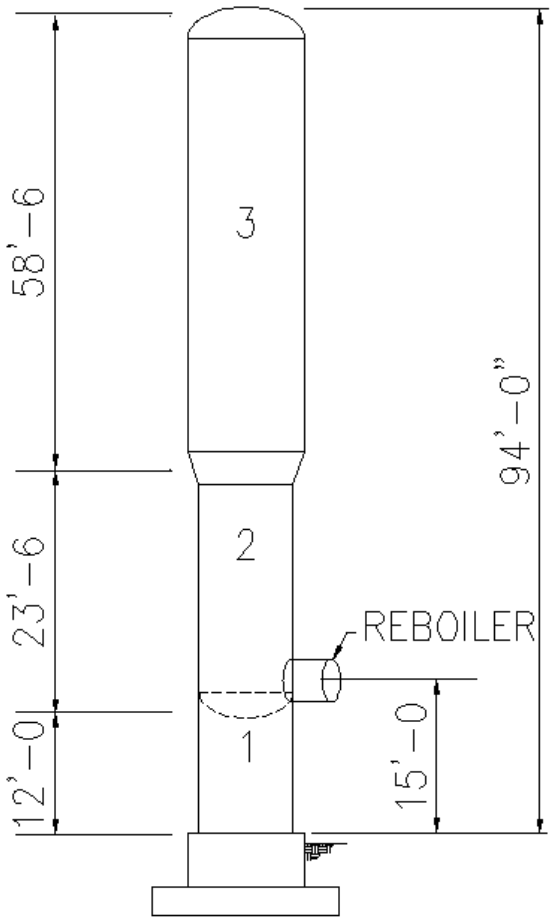

VERTICAL VESSEL

Copyright © 2011, Fluor Corporation. All Rights Reserved.

FLUOR®

EARTHQUAKE ENGINEERING

Sample Design 5: Vertical Vessel At Grade (Varying Properties)

REQUIRED:

Using the Modal Response Spectrum Analysis (MRSA) method, determine the base shear, moment and seismic load effects.

SOLUTION:

Adjusted MCE Parameters

For Site Class D and $S_s = 1.50$: $F_a = 1.0$ {ASCE 7 Table 11.4-1}

For Site Class D and $S_1 = 0.75$: $F_v = 1.5$ {ASCE 7 Table 11.4-2}

$$S_{MS} = F_a S_S = (1.0)(1.50) = 1.50$$ {ASCE 7 Eq. 11.4-1}

$$S_{M1} = F_v S_1 = (1.5)(0.75) = 1.125$$ {ASCE 7 Eq. 11.4-2}

Design Spectral Acceleration Parameters

$$S_{DS} = \frac{2}{3} S_{MS} = \frac{2}{3}(1.50) = 1.00$$ {ASCE 7 Eq. 11.4-3}

$$S_{D1} = \frac{2}{3} S_{M1} = \frac{2}{3}(1.125) = 0.75$$ {ASCE 7 Eq. 11.4-4}

Copyright © 2011, Fluor Corporation. All Rights Reserved.

FLUOR®

EARTHQUAKE ENGINEERING

Sample Design 5: Vertical Vessel At Grade (Varying Properties)

RISA-3D Model

Joint Coordinates and Temperatures

	Label	X [ft]	Y [ft]	Z [ft]	Temp [F]	Detach From Diap...
1	N1	0	0	0	0	
2	N2	0	6	0	0	
3	N3	0	12	0	0	
4	N4	0	15	0	0	
5	N5	0	25.25	0	0	
6	N6	0	35.5	0	0	
7	N7	0	45	0	0	
8	N8	0	55	0	0	
9	N9	0	65	0	0	
10	N10	0	75	0	0	
11	N11	0	85	0	0	
12	N12	0	94	0	0	

Joint Boundary Conditions

	Joint Label	X [k/in]	Y [k/in]	Z [k/in]	X Rot.[k-ft/rad]	Y Rot.[k-ft/rad]	Z Rot.[k-ft/rad]	Footing
1	N1	Reaction	Reaction	Fixed	Fixed	Fixed	Reaction	

General Material Properties

	Label	E [ksi]	G [ksi]	Nu	Therm (\1E5 F)	Density[k/ft^3]
6	gen_Steel	29000	11154	.3	.65	0

General Section Sets

	Label	Shape	Type	Material	A [in2]	Iyy [in4]	Izz [in4]	J [in4]
1	Pipe 3	PI96X0.375	None	gen_Steel	112.656	128769	128769	257539
2	Pipe 2	PI66X0.5	None	gen_Steel	102.887	55179.67	55179.67	110359
3	Pipe1	PI66X0.3125	None	gen_Steel	64.489	34783.072	34783.072	69566.144

Member Primary Data

	Label	I Joint	J Joint	K Joint	Rotate(deg)	Section/Shape	Type	Design List	Material	Design Rules
1	M1	N1	N2			Pipe1	None	None	gen_Steel	Default
2	M2	N2	N3			Pipe1	None	None	gen_Steel	Default
3	M3	N3	N4			Pipe1	None	None	gen_Steel	Default
4	M4	N4	N5			Pipe 2	None	None	gen_Steel	Default
5	M5	N5	N6			Pipe 2	None	None	gen_Steel	Default
6	M6	N6	N7			Pipe 3	None	None	gen_Steel	Default
7	M7	N7	N8			Pipe 3	None	None	gen_Steel	Default
8	M8	N8	N9			Pipe 3	None	None	gen_Steel	Default
9	M9	N9	N10			Pipe 3	None	None	gen_Steel	Default
10	M10	N10	N11			Pipe 3	None	None	gen_Steel	Default
11	M11	N11	N12			Pipe 3	None	None	gen_Steel	Default

Joint Loads and Enforced Displacements (BLC 1 : Operating)

	Joint Label	L,D,M	Direction	Magnitude[(k,k-ft), (in,rad), (k*s^2/f...
1	N4	L	Y	-8

Copyright © 2011, Fluor Corporation. All Rights Reserved.

FLUOR®

EARTHQUAKE ENGINEERING

Sample Design 5: Vertical Vessel At Grade (Varying Properties)

Member Distributed Loads (BLC 1 : Operating)

	Member Label	Direction	Start Magnitude[k/ft,...	End Magnitude[k/ft,d...	Start Location[ft,%]	End Location[ft,%]
1	M1	Y	-.9	-.9	0	0
2	M2	Y	-.9	-.9	0	0
3	M3	Y	-.9	-.9	0	0
4	M4	Y	-1.2	-1.2	0	0
5	M5	Y	-1.2	-1.2	0	0
6	M6	Y	-1.8	-1.8	0	0
7	M7	Y	-1.8	-1.8	0	0
8	M8	Y	-1.8	-1.8	0	0
9	M9	Y	-1.8	-1.8	0	0
10	M10	Y	-1.8	-1.8	0	0
11	M11	Y	-1.8	-1.8	0	0

Response Spectra Data

X Direction Spectra	ASCE 2005, Parametric Design Spectra, SDS = 1, SD1 = 0.75, TL = 8
Modes Used	All 5 modes
Mode No. for Signs	
Modal Combination Method	CQC
Damping Ratio	5 Percent

Frequencies / Participation

Mode Number	Frequency (Hz)	Period (Sec)	Percent Modal Participation X Spectra	Y Spectra	Z Spectra
1	.803	1.245	69.32		
2	.803	1.245			
3	6.592	.152	18.514		
4	6.592	.152			
5	17.735	.056	5.473		
Totals :			93.307		

T = 1.245 Seconds

Joint Reactions (By Combination)

	LC	Joint Label	X [k]	Y [k]	Z [k]	MX [k-ft]	MY [k-ft]	MZ [k-ft]
1	1	N1	0	151.4	NC	NC	NC	0

W = 151.4 K

Copyright © 2011, Fluor Corporation. All Rights Reserved.

FLUOR®

EARTHQUAKE ENGINEERING

Sample Design 5: Vertical Vessel At Grade (Varying Properties)

Equivalent Lateral Force (ELF) Method

$T = 1.245$ seconds {from RISA 3D model}

$W = 151.4K$ {from RISA-3D model}

Vertical vessel at grade is considered to be a Nonbuilding Structure Not Similar To Buildings

$R = 3$ {ASCE 7 Table 15.4-2}

$$C_s = \frac{S_{DS}}{\left(R/I\right)} = \frac{1.00}{\left(3/1.25\right)} = 0.417$$ {ASCE 7 Eq. 12.8-2}

$$C_s \le \frac{S_{D1}}{T\left(R/I\right)} = \frac{0.75}{\left(1.245\text{sec}\right)\left(3/1.25\right)} = 0.251 \quad \underline{\text{governs}}$$ {ASCE 7 Eq. 12.8-3}

$1.245\text{sec} = T < T_L = 8\text{sec}$, <u>need not consider ASCE 7-05 Eq. 12.8-4</u>

$$C_{s(\min)} = 0.044 S_{DS} I \ge 0.01$$ {ASCE 7 Eq. 15.4-3}

$$= 0.044(1.00)(1.25) = 0.055$$

$S_1 > 0.6$ <u>must consider Eq. 15.4-4</u>

$$C_{s(\min)} = \frac{0.5S_1}{\left(R/I\right)} = \frac{0.5(0.75)}{\left(3/1.25\right)} = 0.156$$ {Eq. 15.4-4}

$$V = C_s W = (0.251)(151.4K) = 38.0K$$ {ASCE 7 Eq. 12.8-1}

V_{ELF} = 38.0 K

Modal Response Spectra Analysis (MRSA) – RISA 3D

$$S_{initial} = \frac{I}{R} = \frac{1.25}{3} = 0.417$$ {initial scale factor}

Load Combinations

	Description	Solve	PDelta	SR...	BLC	Fac...	BLC	Fac...	BLC	Fac...	BLC	Fac...	BLC	Fac...	BLC	Fac...	BLC	Fac...	BLC	Fac...
1	Operating (Do)		Y		1	1														
2	Earthquake (E)		Y		SX	.417														

Joint Reactions (By Combination)

	LC	Joint Label	X [k]	Y [k]	Z [k]	MX [k-ft]	MY [k-ft]	MZ [k-ft]
1	2	N1	-45.412	0	NC	NC	NC	-2371.505
2	2	Totals:	-45.412	0	0			

Copyright © 2011, Fluor Corporation. All Rights Reserved.

FLUOR®

EARTHQUAKE ENGINEERING

Sample Design 5: Vertical Vessel At Grade (Varying Properties)

Base Shear

ASCE 7, Section 12.9.4 requires that if the combined response for the modal base shear (V_{MRSA}) is less than 85 percent of the calculated base shear (V_{ELF}), the forces shall be multiplied by $0.85\frac{V_{ELF}}{V_{MRSA}}$. ASCE 7 does not permit scaling MRSA results down to the ELF results.

$$\frac{V_{MRSA}}{V_{ELF}} = \frac{45.412\,K}{38.0\,K} = 1.195 \geq 1.0$$

Therefore, the MRSA results are not permitted to be scaled down to ELF results.

$$S_{final} = S_{initial} = 0.417$$

The RISA 3D model will not be rerun with a revised scale factor.

$$\mathbf{V_{MRSA} = 45.412\ K}$$

$$\mathbf{M_{MRSA} = 2372\ ft\text{-}K}$$

Overturning Moment

$$H_{effective} = \frac{M_{MRSA}}{V_{MRSA}} = \frac{2372\ ft - K}{45.412\,K} = 52.23\ ft$$

$$\frac{H_{effective}}{H} = \frac{52.23\ ft}{94\ ft} = 0.56$$

Seismic Load Effects

$E = E_h + E_v$ {ASCE 7 Eq. 12.4-1}

$E = E_h - E_v$ {ASCE 7 Eq. 12.4-2}

$Q_E = V = 45.4\,K$ {ASCE 7 Sec. 12.4.2.1}

$E_h = \rho Q_E = (1.0)(45.4\,K) = 45.4\,K$ {ASCE 7 Eq. 12.4-3}

$$\mathbf{E_h = 45.4\ K}$$

The Effective Seismic Weight is treated the same as a Dead Load

$E_v = 0.2 S_{DS} D = 0.2(1.00)(151.4\,K) = 30.3\,K$ {ASCE 7 Eq. 12.4-4}

$$\mathbf{E_v = 30.3\ K}$$

Copyright © 2011, Fluor Corporation. All Rights Reserved.

FLUOR®

EARTHQUAKE ENGINEERING

Sample Design 6: Horizontal Vessel On Piers

GIVEN:

Operating Weight $= 335\,K$

Concrete:

normal weight

$f_c' = 3000\ psi$

$I = 1.50$

Site Classification $= C$

$S_s = 1.00$

$S_1 = 0.40$

$T_L = 12\,\text{sec}$

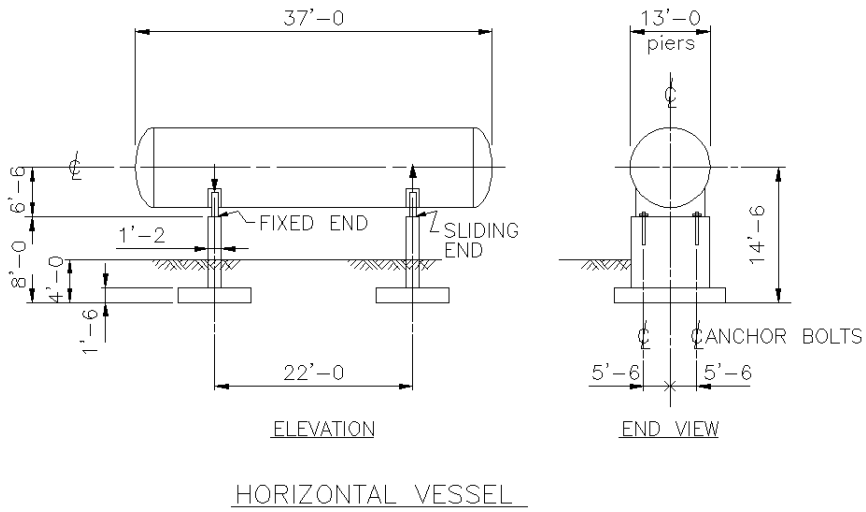

REQUIRED:

Using the Equivalent Lateral Force (ELF) procedure, determine the base shear for the design of the concrete piers.

SOLUTION:

Adjusted MCE Parameters

For Site Class C and $S_s = 1.00$: $F_a = 1.0$ {ASCE 7 Table 11.4-1}

For Site Class C and $S_1 = 0.40$: $F_v = 1.4$ {ASCE 7 Table 11.4-2}

$S_{MS} = F_a S_S = (1.0)(1.00) = 1.00$ {ASCE 7 Eq. 11.4-1}

$S_{M1} = F_v S_1 = (1.4)(0.40) = 0.56$ {ASCE 7 Eq. 11.4-2}

Design Spectral Acceleration Parameters

$S_{DS} = \frac{2}{3} S_{MS} = \frac{2}{3}(1.00) = 0.67$ {ASCE 7 Eq. 11.4-3}

$S_{D1} = \frac{2}{3} S_{M1} = \frac{2}{3}(0.56) = 0.37$ {ASCE 7 Eq. 11.4-4}

Pier Weight

$W_{pier} = (1\ pier)(1.17\ ft)(6.5\ ft)(13.0\ ft)(0.15\,K/\ ft^3) = 14.8\,K/\ pier$

Copyright © 2011, Fluor Corporation. All Rights Reserved.

FLUOR®

EARTHQUAKE ENGINEERING

Sample Design 6: Horizontal Vessel On Piers

LONGITUDINAL DIRECTION

Period

$H = 78\,in$ {pier height}

$L = 156\,in$ {pier width}

$t = 14\,in$ {pier thickness}

$E_c = 57\sqrt{3000\,psi} = 3122\,ksi$ {ACI 318, Section 8.5}

$$I_{pier} = \frac{Lt^3}{12} = \frac{(156\,in)(14\,in)^3}{12} = 35672\,in^4$$

The fixed end pier resists 100% of the effective weight in the longitudinal direction.

$$W_{longitudinal} = W_{operating} + W_{piers} = 335\,K + 2(14.8\,K/pier) = 364.6\,K$$

$$\Delta = \frac{W_{longitudinal} H^3}{3E_c I_{pier}} = \frac{(364.6\,K)(78\,in)^3}{3(3122\,ksi)(35672\,in^4)} = 0.518\,in$$

$T \approx 0.32\sqrt{\Delta} = 0.32\sqrt{0.518\,in} = 0.230$ seconds > 0.06 seconds <u>flexible</u>

Seismic Response Coefficient

In the longitudinal direction, use the lower R value for a horizontal saddle supported welded steel vessel and a cantilever column system detailed to conform to the requirements for special reinforced concrete moment frames.

$$R = 2.5$$

$$C_s = \frac{S_{DS}}{\left(R/I\right)} = \frac{0.67}{\left(2.5/1.50\right)} = 0.402 \quad \underline{\text{governs}}$$ {ASCE 7 Eq. 12.8-2}

$$C_s \le \frac{S_{D1}}{T\left(R/I\right)} = \frac{0.37}{(0.225\,\text{sec})\left(2.5/1.50\right)} = 0.987$$ {ASCE 7 Eq. 12.8-3}

$0.230\,\text{sec} = T < T_L = 12\,\text{sec}$, <u>need not consider ASCE 7-05 Eq. 12.8-4</u>

$C_{s(\min)} = 0.044 S_{DS} I \ge 0.03$ {ASCE 7 Eq. 15.4-3}

$= 0.044(0.67)(1.50) = 0.044$

$S_1 < 0.6$ <u>need not consider Eq. 15.4-4</u>

Copyright © 2011, Fluor Corporation. All Rights Reserved.

FLUOR®

EARTHQUAKE ENGINEERING

Sample Design 6: Horizontal Vessel On Piers

Base Shear

$V = C_s W_{longitudinal} = (0.402)(364.6\,K) = 146.6\,K$ {ASCE 7 Eq. 12.8-1}

$V_{longitudinal}$ = 146.6 K For The Fixed-End Pier

The sliding end pier is designed for 60% of the base shear in the longitudinal direction.

$V = 0.60 C_s W_{longitudinal} = (0.60)(146.6\,K) = 88.0\,K$

$V_{longitudinal}$ = 88.0 K For The Sliding-End Pier

<u>TRANSVERSE DIRECTION</u>

Period

$H = 78\,in$ {pier height}

$L = 156\,in$ {pier width}

$t = 14\,in$ {pier thickness}

$E_c = 57\sqrt{3000\,psi} = 3120\,ksi$ {ACI 318, Section 8.5}

$$I_{pier} = \frac{tL^3}{12} = \frac{(14\,in)(156\,in)^3}{12} = 4429152\,in^4$$

Each pier resists 50% of the effective weight in the transverse direction.

$$W_{transverse} = \frac{W_{operating}}{2} + W_{pier} = \frac{335\,K}{2} + 1(14.8\,K) = 182.3\,K$$

The deflection in the plane of a wall is the summation of the flexural and shear deflections.

$$\Delta = \frac{W_{transverse} H^3}{3EI} + \frac{1.2 W_{transverse} H}{GA}$$

$$= \frac{(182.3\,K)(78\,in)^3}{3(3122\,ksi)(4429152\,in^4)} + \frac{1.2(182.3\,K)(78\,in)}{(.4x3122\,ksi)(14\,in\,x156\,in)} = 0.0021\,in + 0.0063\,in = 0.0084\,in$$

$T \approx 0.32\sqrt{\Delta} = 0.32\sqrt{0.0084\,in} = 0.029$ seconds < 0.06 seconds <u>rigid</u>

Base Shear

In the transverse direction, consider this horizontal vessel at grade to be a Rigid Nonbuilding Structure

$V = 0.30 S_{DS} W_{transverse} I = (0.30)(0.67)(182.3\,K)(1.50) = 55.0\,K$ {ASCE 7 Eq. 15.4-5}

$V_{transverse}$ = 55.0 K For Each Pier

Copyright © 2011, Fluor Corporation. All Rights Reserved.

FLUOR®

EARTHQUAKE ENGINEERING

Sample Design 7: Steel Pipe Support – Transverse Direction

GIVEN:

Operating Weights (including pipes and steel): 125 K

Flare Header: 2 K

Upper Deck: 48 K

Lower Deck: 75 K

Site Class $= E$

Occupancy Category $= III$

$I = 1.25$

$S_s = 1.80$

$S_1 = 0.60$

$T_L = 10\,\text{sec}$

$T = 0.65\,\text{sec}$

Steel Moment Frame

Pipe Support Spacing: 20'-0"

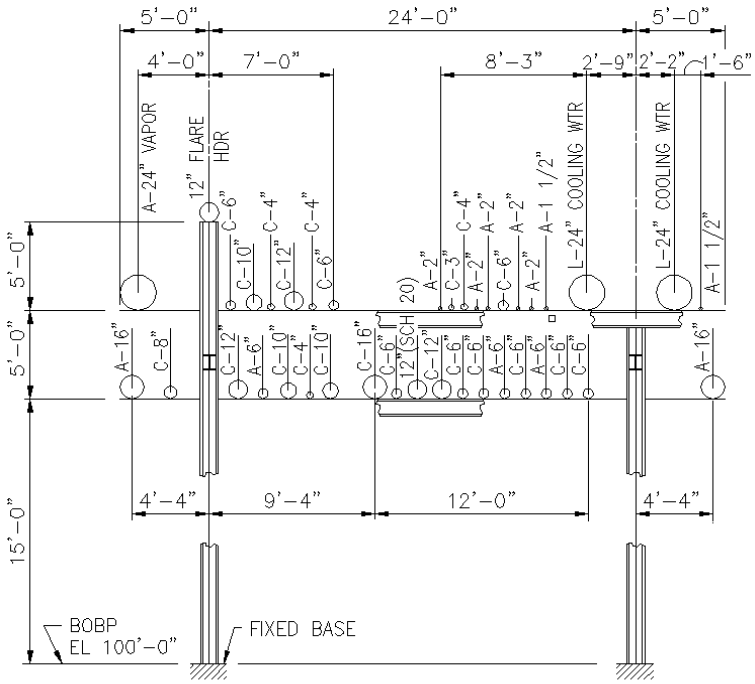

PIPE SUPPORT

REQUIRED:

Using the Equivalent Lateral Force (ELF) Procedure, determine the base shear, vertical distribution of seismic forces, and seismic load effects.

SOLUTION:

Adjusted MCE Parameters

For Site Class E and $S_s = 1.80$: $F_a = 0.9$ {ASCE 7 Table 11.4-1}

For Site Class E and $S_1 = 0.60$: $F_v = 2.4$ {ASCE 7 Table 11.4-2}

$S_{MS} = F_a S_S = (0.9)(1.80) = 1.62$ {ASCE 7 Eq. 11.4-1}

$S_{M1} = F_v S_1 = (2.4)(0.60) = 1.44$ {ASCE 7 Eq. 11.4-2}

Copyright © 2011, Fluor Corporation. All Rights Reserved.

FLUOR®

EARTHQUAKE ENGINEERING

Sample Design 7: Steel Pipe Support – Transverse Direction

Design Spectral Acceleration Parameters

$$S_{DS} = \frac{2}{3} S_{MS} = \frac{2}{3}(1.62) = 1.08 \qquad \text{\{ASCE 7 Eq. 11.4-3\}}$$

$$S_{D1} = \frac{2}{3} S_{M1} = \frac{2}{3}(1.44) = 0.96 \qquad \text{\{ASCE 7 Eq. 11.4-4\}}$$

Structural Systems

The Steel Pipe Support (Rack) is considered to be a Nonbuilding Structure Similar To Buildings. There are seven (7) structural steel system options in ASCE 7 Table 15.4-1, each with different R values, height limitations, and seismic detailing requirements, as summarized in the following table.

ASCE 7 Table 15.4-1, Selected Summary						
Option	Structural System	Detailing Requirements	R	Steel Pipe Rack Height Limit (ft) As Function of Seismic Design Category (SDC)		
				A, B & C	D & E	F
1	Special Steel Moment Frame	AISC 341, Chapter 9	8	No Limit	No Limit	No Limit
2	Intermediate Steel Moment Frame	AISC 341, Chapter 10	4.5	No Limit	65 feet	65 feet
3	Intermediate Steel Moment Frame	AISC 341, Chapter 10	2.5	No Limit	160 feet	100 feet
4	Intermediate Steel Moment Frame	AISC 341, Chapter 10	1.5	No Limit	No Limit	No Limit
5	Ordinary Steel Moment Frame	AISC 341, Chapter 11	3.5	No Limit	65 feet	65 feet
6	Ordinary Steel Moment Frame	AISC 341, Chapter 11	2.5	No Limit	100 feet	65 feet
7	Ordinary Steel Moment Frame	AISC 360	1	No Limit	No Limit	No Limit

Notes:

(1) The steel pipe rack height is measured from grade to the top flange of the highest moment frame beam.

(2) The height limits for the Intermediate and Ordinary Steel Moment Frames are based on field-bolted end plate beam-to-column moment connections.

(3) AISC 341 detailing requirements for Special and Intermediate Steel Moment Frames require "tested connections", such as those prescribed by the AISC 358.

(4) AISC 341 detailing requirements for Special and Intermediate Steel Moment Frames include stringent lateral bracing requirements for the beams that may be difficult to implement in a typical pipe support.

Copyright © 2011, Fluor Corporation. All Rights Reserved.

FLUOR®

EARTHQUAKE ENGINEERING

Sample Design 7: Steel Pipe Support – Transverse Direction

Seismic Design Category

$S_1 = 0.60 < 0.75$ <u>SDC E and F are not applicable</u> {ASCE 7 Sec 11.6}

For $S_{DS} = 1.08$ and Occupancy Category $= III$, $SDC = D$ {ASCE 7 Table 11.6-1}

For $S_{D1} = 0.96$ and Occupancy Category $= III$, $SDC = D$ {ASCE 7 Table 11.6-2}

Seismic Design Category = D

For this sample design, the steel pipe rack has been assigned SDC D with a height of 20 feet to the highest moment frame beam. None of the seven structural system options are precluded by the steel pipe rack height limits. A decision on structural system will be made after comparing the base shear results.

Seismic Response Coefficient And Base Shear

$0.65\,\text{sec} = T < T_L = 10\,\text{sec}$, <u>need not consider ASCE 7-05 Eq. 12.8-4</u>

$S_1 \geq 0.6$ <u>must consider Eq. 12.8-6</u>

	OPTION							
Structural System =	SMF	IMF			OMF			
Option =	1	2	3	4	5	6	7	
$R =$	8	4.5	2.5	1.5	3.5	2.5	1	
$C_s = \frac{S_{DS}}{\left(R/I\right)} = \frac{(1.08)(1.25)}{R} =$	0.17	0.30	0.54	0.90	0.39	0.54	1.35	{ASCE 7 Eq. 12.8-2}
$C_s \leq \frac{S_{D1}}{T\left(R/I\right)} = \frac{(0.96)(1.25)}{(0.65\,\text{sec})R} =$	0.23	0.41	0.74	1.23	0.52	0.74	1.85	{ASCE 7 Eq. 12.8-3}
$C_{s(\min)} =$	0.01	0.01	0.01	0.01	0.01	0.01	0.01	{ASCE 7 Eq. 12.8-5}
$C_{s(\min)} = \frac{0.5S_1}{\left(R/I\right)} = \frac{0.5(0.60)(1.25)}{R} =$	0.05	0.08	0.15	0.25	0.11	0.15	0.38	{ASCE 7 Eq. 12.8-6}
$C_s =$	0.17	0.30	0.54	0.90	0.39	0.54	1.35	
$V = C_s(125\,K) =$	21.2	37.5	67.5	101	**48.8**	67.5	169	Kips

Option 5 is selected based on the most economical tradeoff of base shear and seismic detailing requirements.

V = 48.8 K

Copyright © 2011, Fluor Corporation. All Rights Reserved.

FLUOR®

EARTHQUAKE ENGINEERING

Sample Design 7: Steel Pipe Support – Transverse Direction

Vertical Distribution Of Seismic Forces

For $0.5\,\text{sec} < T < 2.5\,\text{sec}$:

$$k = 1.0 + 0.5(T - 0.5) = 1.0 + 0.5(0.65 - 0.5) = 1.075$$

$$C_{vx} = \frac{w_x h_x^{\,k}}{\sum_{i=1}^{n} w_i h_i^{\,k}}$$ {ASCE 7 Eq. 12.8-12}

$$F_x = C_{vx} V = C_{vx}(48.8\,K)$$ {ASCE 7 Eq. 12.8-11}

Level i	w_x (Kips)	h_x (ft)	$w_x h_x^{\,k}$ (ft-K)	C_{vx}	F_x (Kips)	Story Shear (Kips)
Flare Header	2.0	25	64	0.024	1.2	1.2
Upper Deck	48.0	20	1202	0.455	22.2	23.4
Lower Deck	75.0	15	1378	0.521	25.4	48.8
$\Sigma =$	**125.0**	$\Sigma =$	**2644**	**1.000**	**48.8**	

Redundancy Factor

It is assumed that the pipeway has no horizontal bracing system that would serve as a diaphragm. If one individual transverse frame fails, there is no load path for lateral force transfer to the adjacent transverse frame. As a result, each frame line must be treated as an individual structure. For this transverse frame, the loss of moment resistance at both ends of a single beam would in more than a 33% loss of story strength.

ρ = 1.3

Seismic Load Effects

$$E = E_h + E_v$$ {ASCE 7 Eq. 12.4-1}

$$E = E_h - E_v$$ {ASCE 7 Eq. 12.4-2}

$$Q_E = V = 48.8\,K$$ {ASCE 7 Sec. 12.4.2.1}

$$E_h = \rho Q_E = (1.3)(48.8K) = 63.4\,K$$ {ASCE 7 Eq. 12.4-3}

E_h = 63.4 K

The Operating Weight is treated the same as a Dead Load

$$E_v = 0.2 S_{DS} D = 0.2(1.08)(125\,K) = 27.0\,K$$ {ASCE 7-05 Eq. 12.4-4}

E_v = 27.0 K

Copyright © 2011, Fluor Corporation. All Rights Reserved.